SSV KIT - Can-Am JL Audio System - Maverick R Series

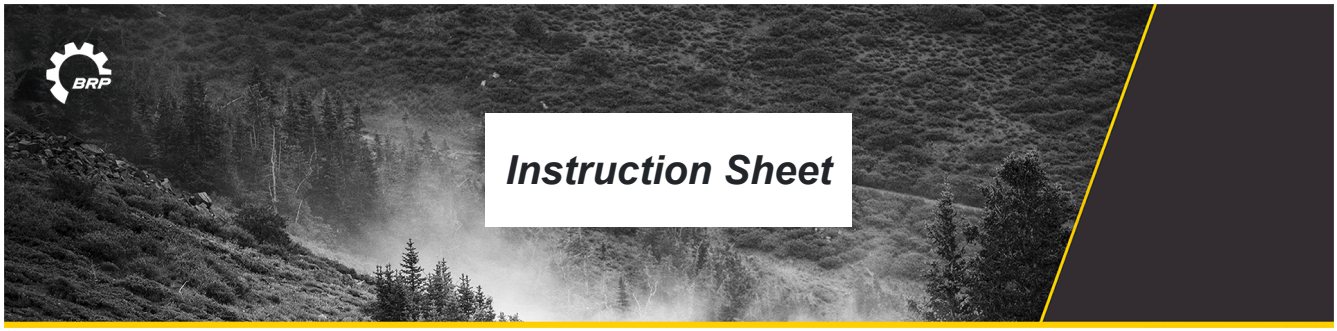

Can-Am Off-road

August 20, 2026
Version D

487803844

Time for Completion: 3.5 HOURS

Can-Am JL Audio System - Maverick R Series

The following symbols may be used in this document:

DANGER

Indicates a hazardous situation that, if not avoided, will result in death or serious injury.

WARNING

Indicates a hazardous situation that, if not avoided, could result in death or serious injury.

CAUTION

Indicates a hazardous situation that, if not avoided, could result in minor or moderate injury.

NOTICE

Indicates an instruction which, if not followed, could severely damage vehicle components or other property.

WARNING

- **For safety reasons, this kit must be installed by an authorized BRP dealer.**
- **This kit is designed for specific applicable models only (authorized BRP dealers will confirm model(s)). It is not recommended for units other than the one (those) for which it was sold.**
- **If the installation of the kit requires a template, ensure template is to scale.**
- **Should removal of a locking device (e.g. lock tabs, self-locking fasteners, etc.) be required when undergoing disassembly/ assembly, always replace with a new one.**
- **Torque wrench tightening specifications must strictly be adhered to.**
- **Always wear EYE PROTECTION AND APPROPRIATE GLOVES when using power tools.**
- **Always be aware of parts that can move, such as wheels, transmission components, etc.**
- **Some components may be HOT. Always wait for all components to cool down before performing work.**
- **Unless otherwise specified, engine must be OFF when performing any operation on the vehicle.**

WARNING

Some important safety information and/or operating instructions dedicated to the end user might be included in this instruction sheet. Make sure to give the kit part number as well as the instruction sheet included with this kit to the customer. Verify that the customer has access to all the information required for proper use of the accessory.

Note

USE TIGHTENING TORQUES IN THE FOLLOWING TABLE IF NOT OTHERWISE SPECIFIED.

–	GRADE			
–	5.8	8.8	10.9	12.9
M4	1.8 N•m ± 0.2 N•m	2.8 N•m ± 0.2 N•m	3.8 N•m ± 0.2 N•m	4.5 N•m ± 0.5 N•m
	(16 lbf•in ± 2 lbf•in)	(25 lbf•in ± 2 lbf•in)	(34 lbf•in ± 2 lbf•in)	(40 lbf•in ± 4 lbf•in)
M5	3.3 N•m ± 0.2 N•m	5 N•m ± 0.5 N•m	7.8 N•m ± 0.7 N•m	9 N•m ± 1 N•m
	(29 lbf•in ± 2 lbf•in)	(44 lbf•in ± 4 lbf•in)	(69 lbf•in ± 6 lbf•in)	(80 lbf•in ± 9 lbf•in)
M6	7.5 N•m ± 1 N•m	10 N•m ± 2 N•m	12.8 N•m ± 2.2 N•m	16 N•m ± 2 N•m
	(66 lbf•in ± 9 lbf•in)	(89 lbf•in ± 18 lbf•in)	(113 lbf•in ± 19 lbf•in)	(142 lbf•in ± 18 lbf•in)
M8	15.3 N•m ± 1.7 N•m	24.5 N•m ± 3.5 N•m	31 .5 N•m ± 3.5 N•m	40 N•m ± 5 N•m
	(135 lbf•in ± 15 lbf•in)	(18 lbf•ft ± 3 lbf•ft)	(23 lbf•ft ± 3 lbf•ft)	(30 lbf•ft ± 4 lbf•ft)
M10	29 N•m ± 3 N•m	48 N•m ± 6 N•m	61 N•m ± 9 N•m	73 N•m ± 7 N•m
	(21 lbf•ft ± 2 lbf•ft)	(35 lbf•ft ± 4 lbf•ft)	(45 lbf•ft ± 7 lbf•ft)	(54 lbf•ft ± 5 lbf•ft)
M12	52 N•m ± 6 N•m	85 N•m ± 10 N•m	105 N•m ± 15 N•m	128 N•m ± 17 N•m
	(38 lbf•ft ± 4 lbf•ft)	(63 lbf•ft ± 7 lbf•ft)	(77 lbf•ft ± 11 lbf•ft)	(94 lbf•ft ± 13 lbf•ft)
M14	85 N•m ± 10 N•m	135 N•m ± 15 N•m	170 N•m ± 20 N•m	200 N•m ± 25 N•m
	(63 lbf•ft ± 7 lbf•ft)	(100 lbf•ft ± 11 lbf•ft)	(125 lbf•ft ± 15 lbf•ft)	(148 lbf•ft ± 18 lbf•ft)
M16	126 N•m ± 14 N•m	205 N•m ± 25 N•m	255 N•m ± 30 N•m	305 N•m ± 35 N•m
	(93 lbf•ft ± 10 lbf•ft)	(151 lbf•ft ± 18 lbf•ft)	(188 lbf•ft ± 22 lbf•ft)	(225 lbf•ft ± 26 lbf•ft)
M18	170 N•m ± 20 N•m	273 N•m ± 32 N•m	330 N•m ± 25 N•m	413 N•m ± 47 N•m
	(125 lbf•ft ± 15 lbf•ft)	(201 lbf•ft ± 24 lbf•ft)	(243 lbf•ft ± 18 lbf•ft)	(305 lbf•ft ± 35 lbf•ft)

Note

The illustrations in this document show typical construction of the different assemblies and may not reproduce the full detail or exact shape of the parts; however, they represent parts that have the same or similar function. In the pictures below, parts may have been removed for clarity purposes.

ICON LEGEND

ICON



REQUIRED TOOLS

REQUIRED TOOLS			USE
T1	Drill bit 9.5 mm (3/8 in)		To drill rivets on the LH front mudguard
T2	Drill bit 16 mm (5/8 in)		To drill holes in door panels

PARTS TO BE INSTALLED

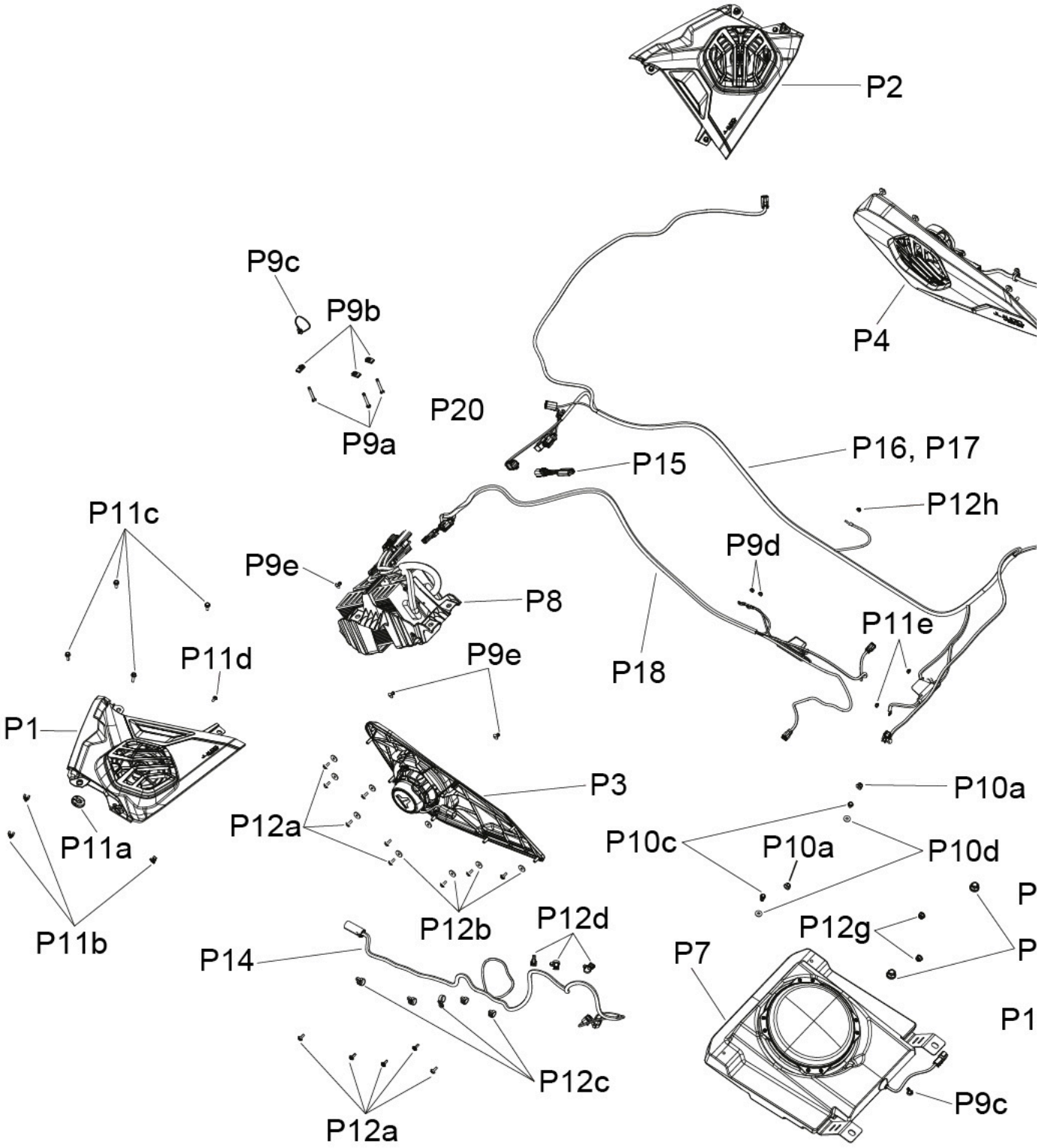

2-UP MODEL

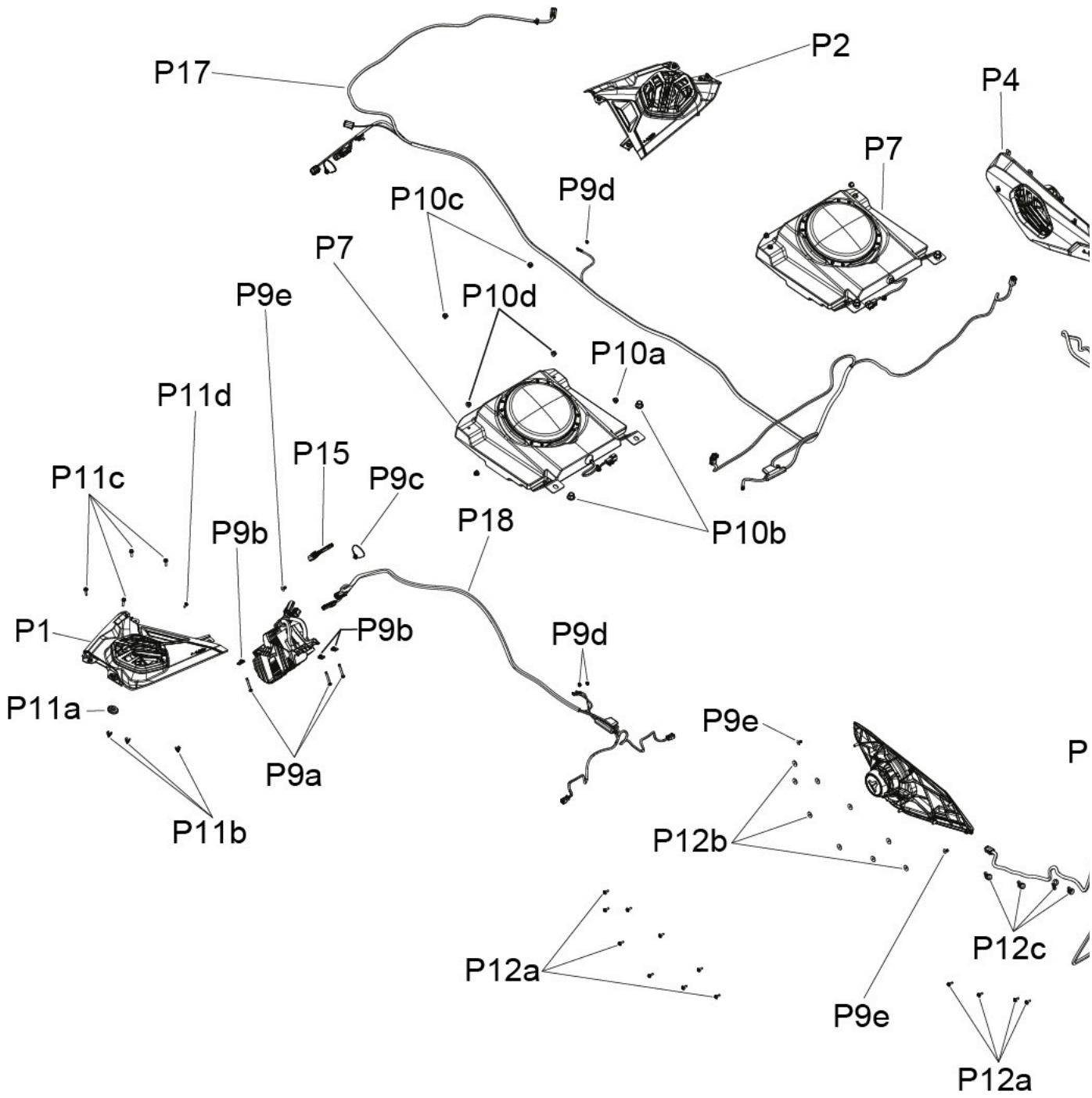
P17
P2
P4
P7
P9d
P10c
P7
P9e
P10d
P10a
P11d
P15
P11c
P9c
P9b
P18
P10b
P1
P9b
P9d
P11a
P9e
P9a
P11b
P12b
P12c
P12a
P9e
P12a

MAX MODEL

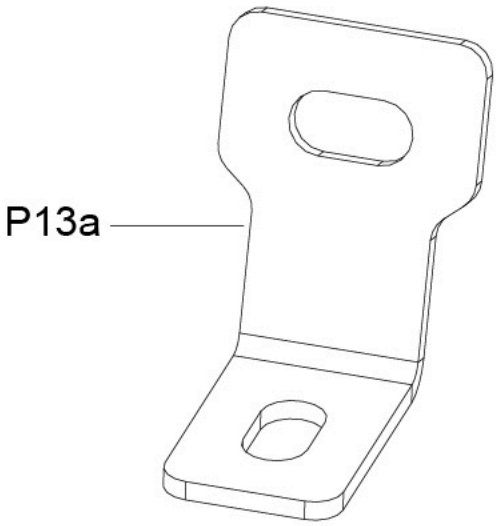

MY24 AND PRIOR

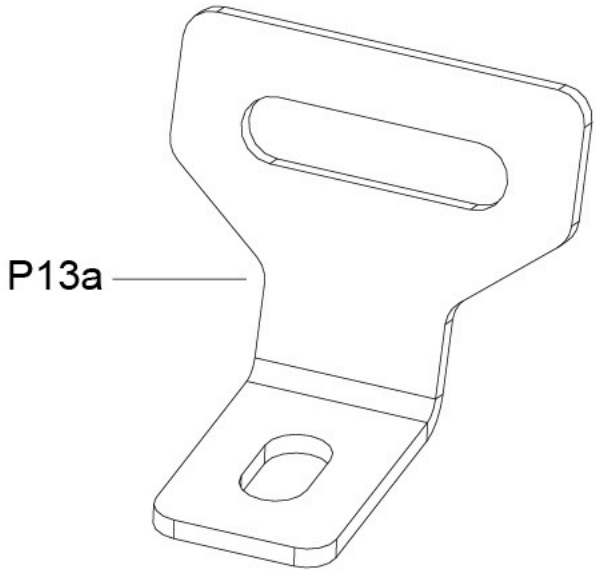

MY25 AND UP

ITEM	DESCRIPTION	PART NUMBER	QTY			
			Level 5 715007957	Level 3 715007954	Amplifier 715007714	Subwoofer 715007310
P1	LH Front Speaker With LED	Refer to Service Parts	1	0	0	0
	LH Front Speaker Without LED	Refer to Service Parts	0	1	0	0
P2	RH Front Speaker With LED	Refer to Service Parts	1	0	0	0
	RH Front Speaker Without LED	Refer to Service Parts	0	1	0	0
P3	LH Door Speaker With LED	Refer to Service Parts	1	0	0	0
P4	RH Door Speaker With LED	Refer to Service Parts	1	0	0	0
P5	LH Rear Speaker With LED	Refer to Service Parts	1	0	0	0
	LH Rear Speaker Without LED	Refer to Service Parts	0	1	0	0
P6	RH Rear Speaker With LED	Refer to Service Parts	1	0	0	0
	RH Rear Speaker Without LED	Refer to Service Parts	0	1	0	0
P7	Subwoofer	Refer to Service Parts	2	1	0	1
P8	Amplifier Support	Refer to Service Parts	1	1	1	0
P8a	M4 X 25 Hex. Screw	207142544	4	4	4	0
P8b	M4 Elastic Nut	232541484	4	4	4	0

ITEM	DESCRIPTION	PART NUMBER	QTY			
			Level 5 715007957	Level 3 715007954	Amplifier 715007714	Subwoofer 715007310
P9	Secondary Fastener Kit	715008268	1	1	1	0
P9a	M6 X 45 Hex. Screw	207364560	3	3	3	0
P9b	M6 Panel Nut	250100198	3	3	3	0
P9c	Cable Tie with Dart	710005529	2	2	2	0
P9d	M6 Hex. Elastic Nut	232561200	2	2	2	0
P9e	3/16 Rivet	293150108	3	3	3	0
P10	Lower Fastener Kit	Not Available Separately	2	1	0	1
P10a	M8 Hex. Elastic Nut	233281464	4	2	0	2
P10b	M12 Hex. Elastic Nut	233221416	4	2	0	2
P10c	M6 X 12 Hex. Flanged Screw	207661254	4	2	0	2
P10d	M6 Stainless Washer	234062670	4	2	0	2

ITEM	DESCRIPTION	PART NUMBER	QTY			
			Level 5 715007957	Level 3 715007954	Amplifier 715007714	Subwoofer 715007310
P11	Upper Fastener Kit	Not available separately	1	1	0	0
P11a	Grommet	705010718	2	2	0	0
P11b	Clip	517306478	6	6	0	0
P11c	M6 X 20 Hex. Flanged Screw	207562054	12	8	0	0
P11d	M5 X 14 Torx Truss Nylock Screw	250000742	2	2	0	0
P11e	M6 Hex. Elastic Nut	232561200	2	2	0	0
P12	Door Fastener Kit	715008272	1	0	0	0
P12a	K50 X 16 Flanged Plastite Screw	250000959	28	0	0	0
P12b	Washer	250200016	18	0	0	0
P12c	Cable Tie with Mount Hole	710004424	10	0	0	0
P12d	Cable Tie with Clip	710005037	9	0	0	0
P12e	368 mm Cable Tie	293750008	6	0	0	0
P12f	Cable Tie with Dart	710003168	10	0	0	0
P12g	M8 Hex. Elastic Nut	233281414	4	0	0	0
P12h	M6 Hex. Elastic Nut	232561200	1	0	0	0
P12j	Gasket (500 mm)	Not Available Separately	1	0	0	0
P13	Rear Fastener Kit	Not Available Separately	1	1	0	0
P13a	MY24 Speaker Support	Not available separately	2	2	0	0
	MY25 Speaker Support Kit	715010616 (Qty 2 in kit)	2	2	0	0
P13b	M6 X 16 Hex. Flanged Screw	250000717	6	6	0	0
P13c	M6 Panel Nut	250100198	8	8	0	0
P13d	M6 X 20 S.Grip Hex. Flanged Screw	207562054	4	4	0	0
P13e	Cable Tie with Clip	710005037	4	4	0	0
P13f	M6 Stainless Washer	234062670	2	2	0	0
P14	Door Harness	Refer to Service Parts	2	0	0	0
P15	LED Control Module	710007982	1	0	0	0
P16	Level 5 Primary Harness	Refer to Service Parts	1	0	0	0
P17	Level 3 Primary Harness	Refer to Service Parts	0	1	0	0
P18	Subwoofer Harness	Refer to Service Parts	1	0	0	0

SERVICE PARTS

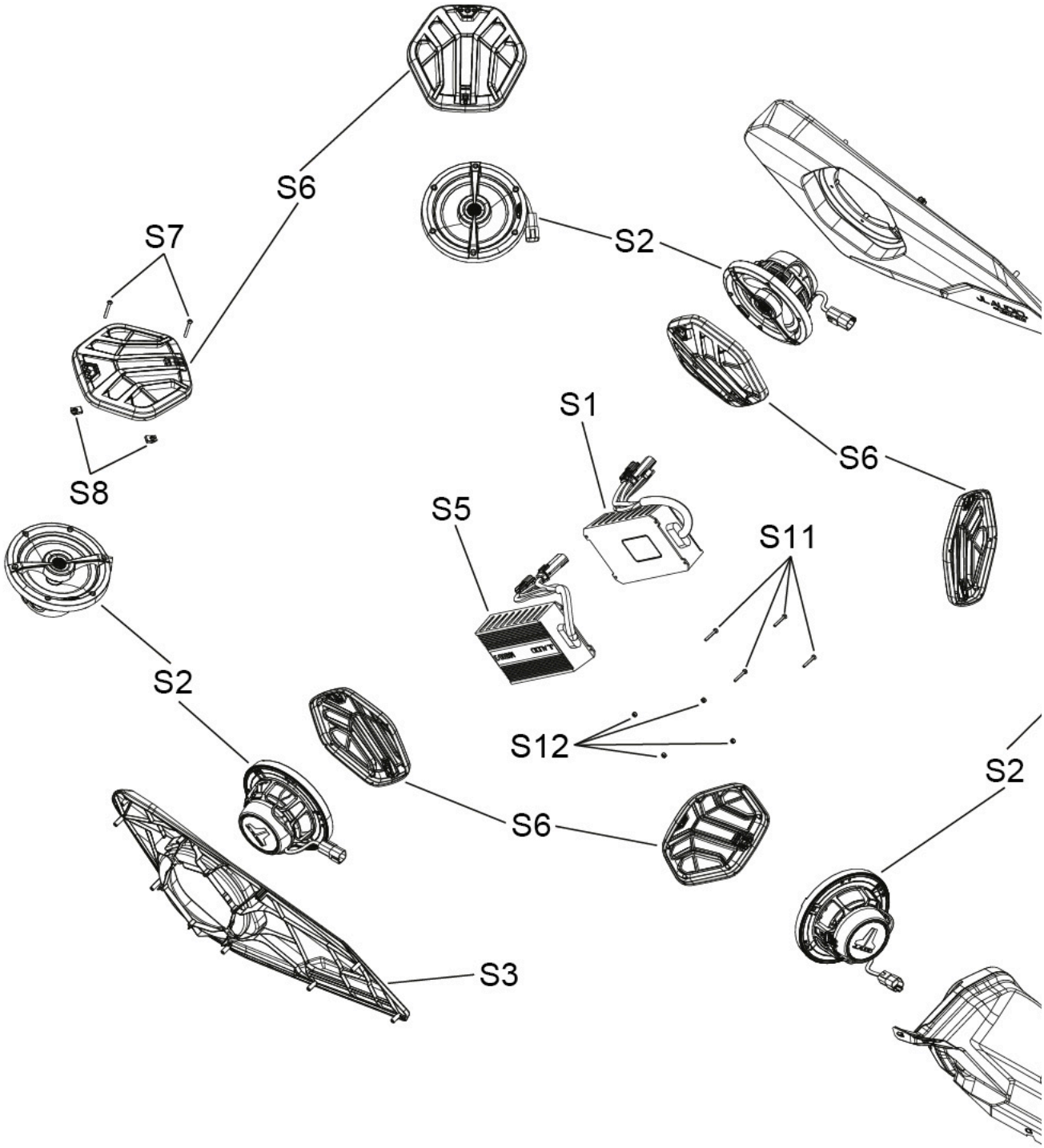
S6
S7
S2
S8
S1
S6
S5
S11
S2
S12
S6
S2
S3

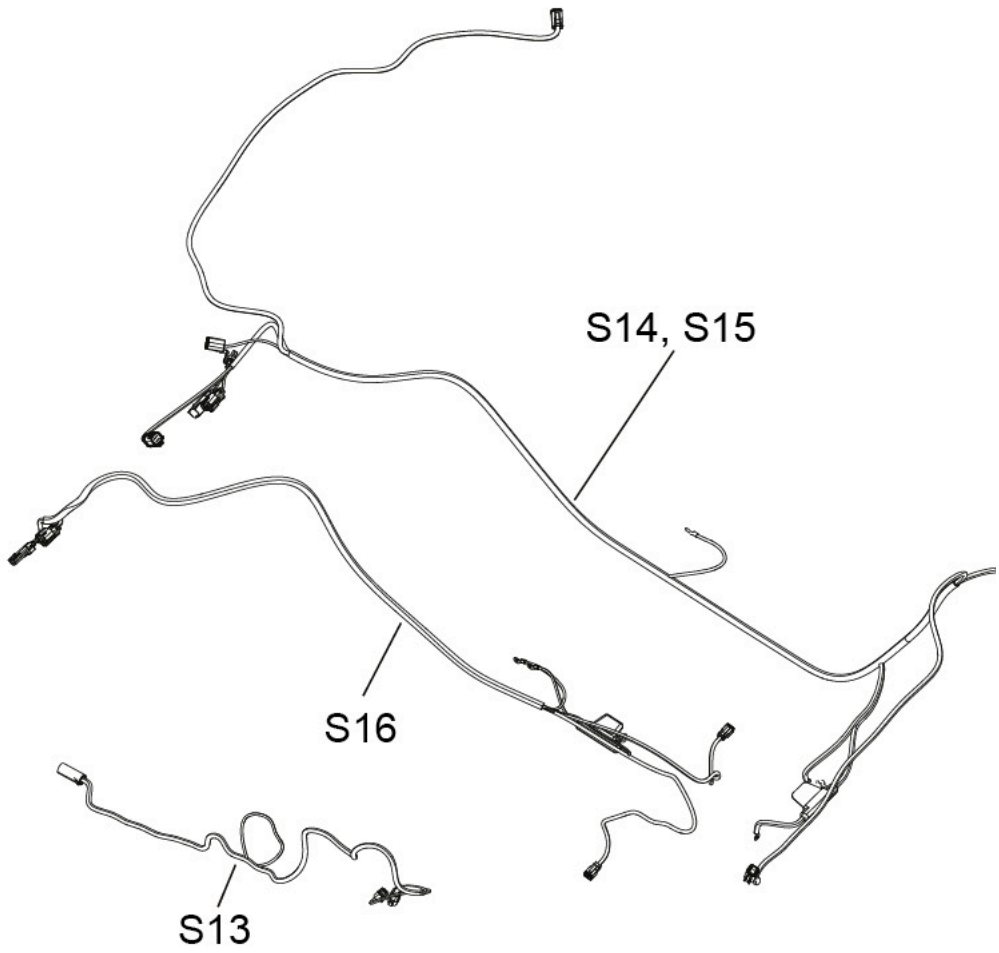

ITEM	DESCRIPTION	PART NUMBER	QTY		
			Level 5 715007957	Level 3 715007954	Amplifier 715007714
S1	Audio Amplifier (MX280-4)	710008954	0	1	0
	Audio Amplifier (MX500-4)	710007971	1	0	0
S2	Mid-Range Speaker With LED (6.6 in)	710009522	6	0	0
	Mid-Range Speaker Without LED (6.6 in)	710009523	0	4	0
S3	LH Central Speaker Enclosure	710007953	1	0	0
S4	RH Central Speaker Enclosure	710007955	1	0	0
S5	Subwoofer Amplifier (MX500-1)	710007970	1	1	1
S6	Speaker Grill	710008031	6	4	0
S7	M4 X 40 Panhead Torx Screw	205444056	12	8	0
S8	M4 Panel Nut	250000143	12	8	0
S9	LH Rear Speaker Enclosure	710009030	1	1	0
S10	RH Rear Speaker Enclosure	710009031	1	1	0
S11	M4 X 25 Hex. Screw	207142544	4	4	4
S12	M4 Hex. Elastic Nut	232541484	4	4	4
S13	Door Harness	710008259	1	0	0
S14	Level 5 Primary Harness	710008702	1	0	0
S15	Level 3 Primary Harness	710008797	0	1	0
S16	Subwoofer Harness	710008703	1	1	1

VEHICLE PREPARATION

> **Note**
>
> **This accessory must be installed in conjunction with the following kit if not equipped with the 10.25" Color Touchscreen Display:**
>
> **- Can-Am JL Audio Source Unit (P/N 715008230)**
>
> **-Refer to the *Instruction Sheet* 487803942 for more details.**

> **Note**
>
> **In some illustrations, parts were removed for clarity purposes.**

> **Note**
>
> **Choose one of the following topics according on which kit(s) you are installing.**

LEVEL 5 AUDIO SYSTEM

1. Remove all of the following. (Except LH and RH Door Panels (#12) if installing only Amplifier and Subwoofer at the same time.)
    1. Driver and passenger seats
    2. Fuse box cover
    3. Central storage cover
    4. LH and RH dash trims
    5. LH and RH front cage trims
    6. LH and RH upper dashboard panels
    7. Central Dashboard
    8. LH and RH dashboard trims
    9. LH and RH lower dashboard panels
    10. LH and RH front cage panels
    11. LH and RH door handle support panels
    12. LH and RH door panels
    13. Center upper console panel
    14. LH and RH front console panel
    15. LH and RH console panel
    16. (MAX Only) LH and RH upper central side panel
    17. (MAX Only) LH and RH lower central side panel

2-UP MODELS

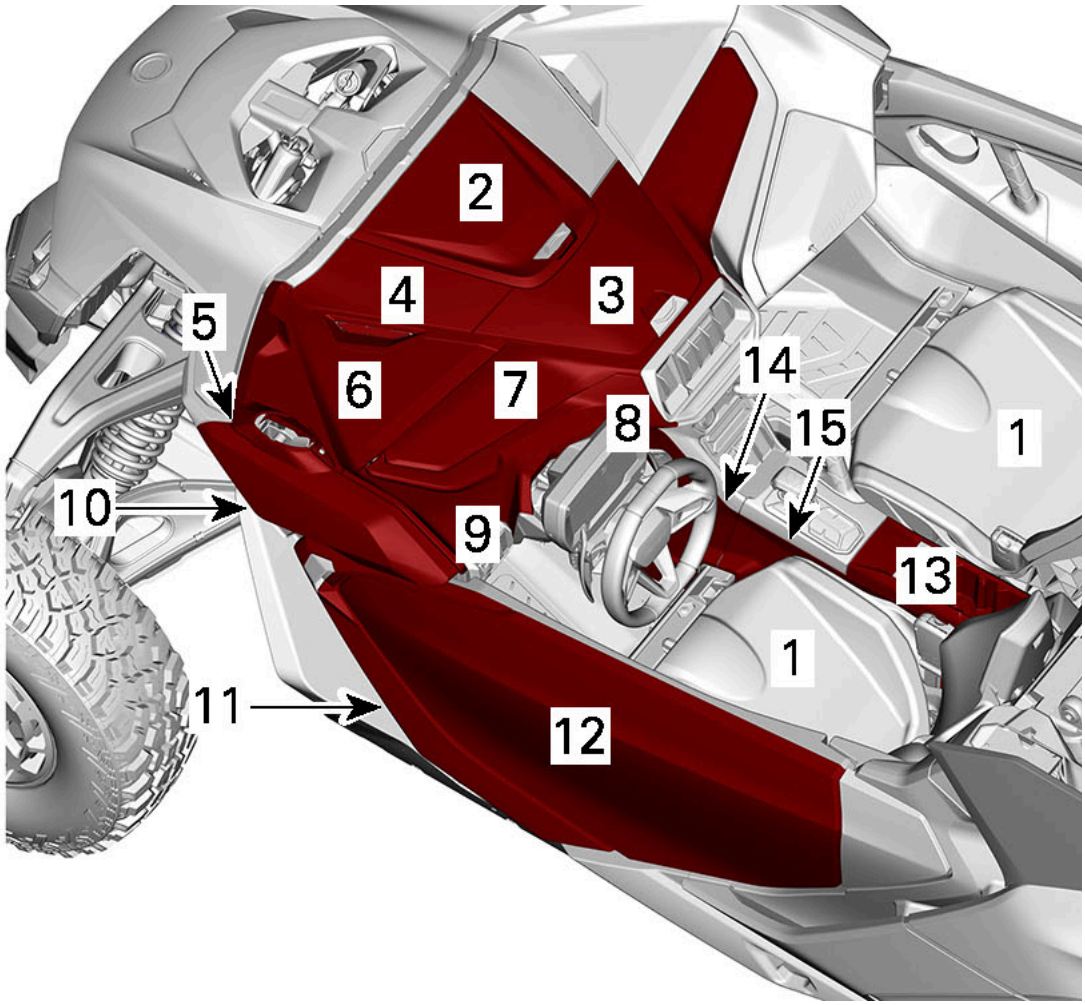

MOSTLY LH SIDE SHOWN AS REFERENCE

1. Driver and passenger seats
2. Fuse box cover
3. Central storage cover
4. LH and RH dash trims
5. LH and RH front cage trims
6. LH and RH upper dashboard panels
7. Central dashboard
8. LH and RH dashboard trims
9. LH and RH lower dashboard panels
10. LH and RH front cage panels
11. LH and RH door handle support panels
12. LH and RH door panels
13. Center upper console panel
14. LH and RH front console panel
15. LH and RH console panel

MAX MODELS

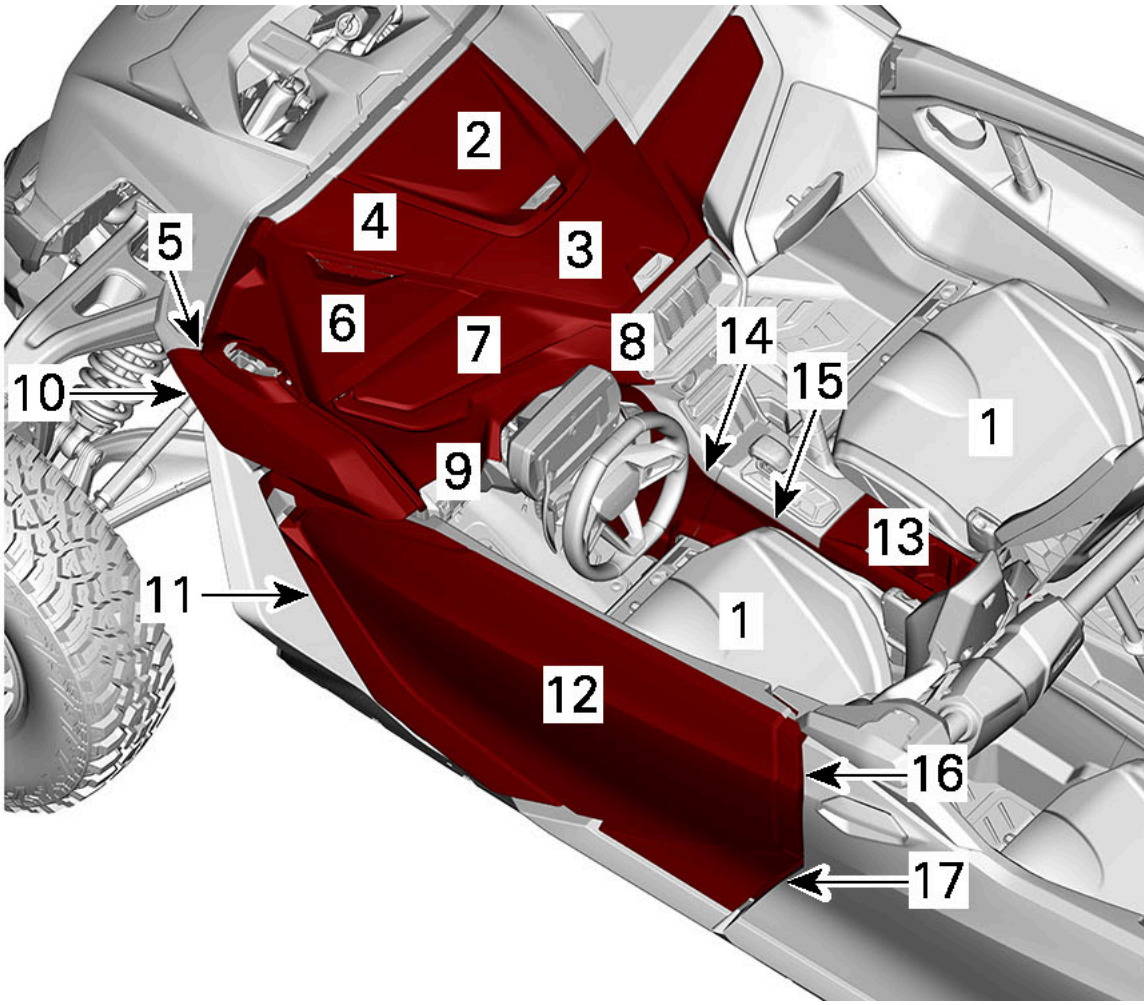

MOSTLY LH SIDE SHOWN AS REFERENCE

1. Driver and passenger seats
2. Fuse box cover
3. Central storage cover
4. LH and RH dash trims
5. LH and RH front cage trims
6. LH and RH upper dashboard panels
7. Central dashboard
8. LH and RH dashboard trims
9. LH and RH lower dashboard panels
10. LH and RH front cage panels
11. LH and RH door handle support panels
12. LH and RH door panels
13. Center upper console panel
14. LH and RH front console panel
15. LH and RH console panel
16. LH and RH upper central side panel
17. LH and RH lower central side panel

LEVEL 3 AUDIO SYSTEM

1. Remove all of the following.
    1. Driver and passenger seats
    2. Fuse box cover

3. Central storage cover
4. LH and RH dash trims
5. LH and RH front cage trims
6. LH and RH upper dashboard panels
7. Central Dashboard
8. LH and RH dashboard trims
9. LH front cage panels
10. LH and RH door panels
11. Center upper console panel
12. LH front console panel
13. LH console panel
14. (MAX Only) LH and RH upper central side panel
15. (MAX Only) LH and RH lower central side panel

2-UP MODELS

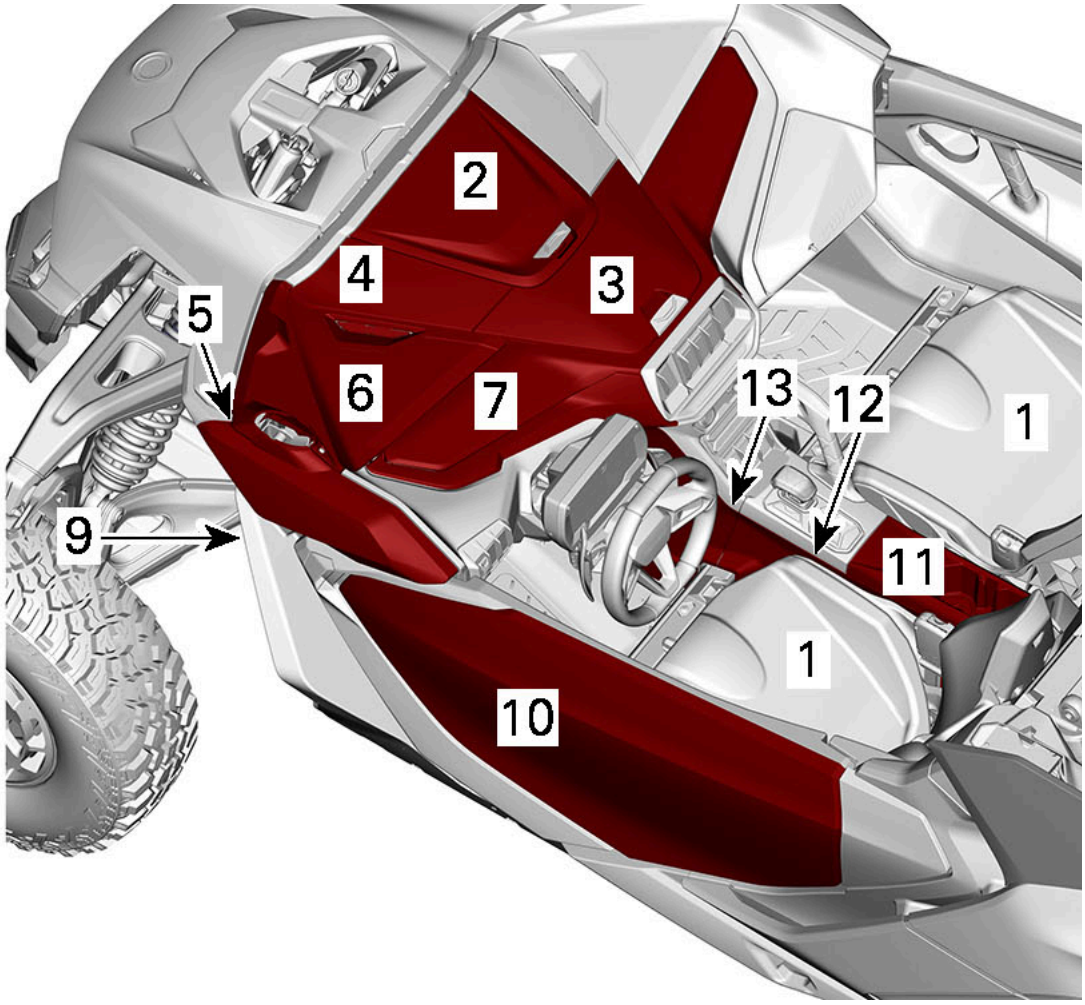

MOSTLY LH SIDE SHOWN AS REFERENCE

1. Driver and passenger seats
2. Fuse box cover
3. Central storage cover
4. LH and RH dash trims
5. LH and RH front cage trims
6. LH and RH upper dashboard panels
7. Central dashboard

8. LH dashboard trims
9. LH front cage panels
10. LH and RH door panels
11. Center upper console panel
12. LH front console panel
13. LH console panel

MAX MODELS

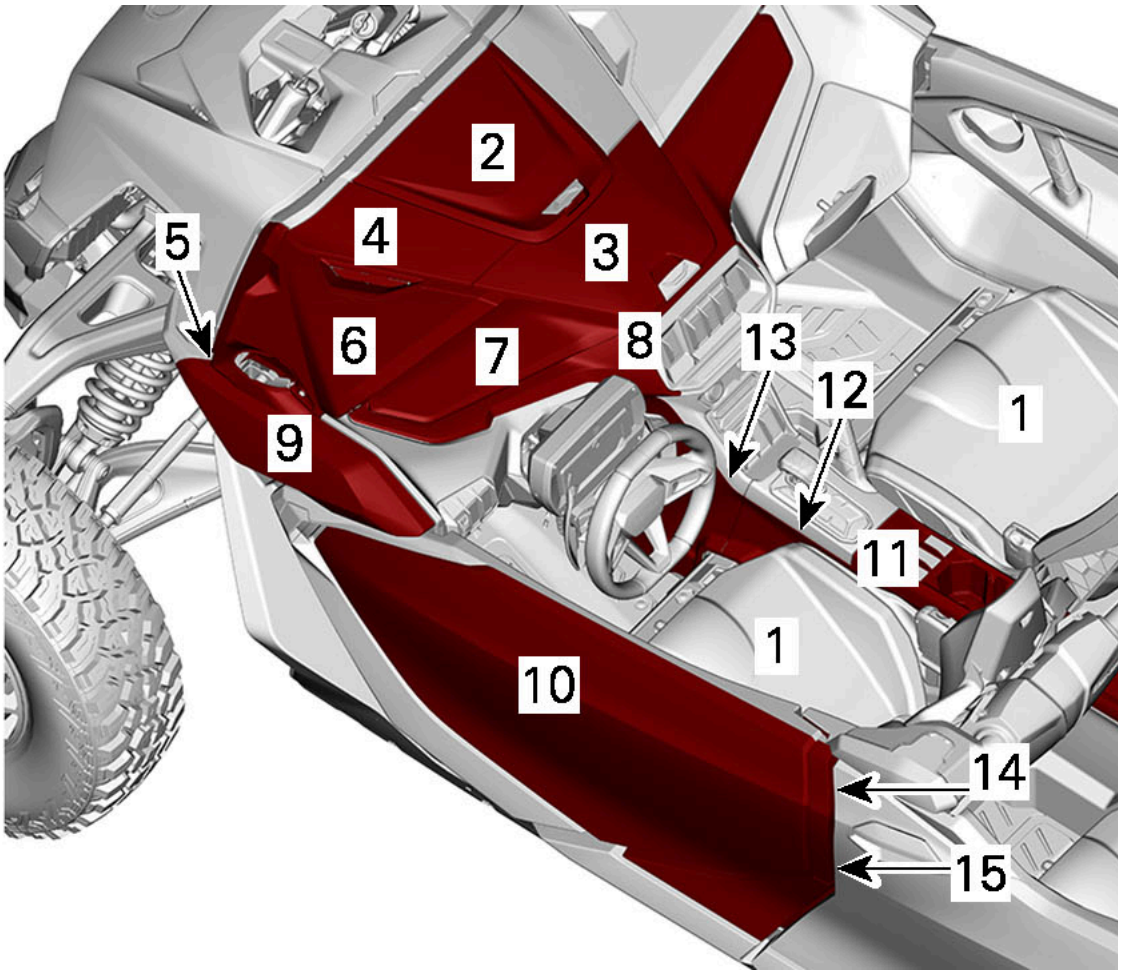

MOSTLY LH SIDE SHOWN AS REFERENCE

1. Driver seat, front RH passenger seat and rear LH passenger seat.
2. Fuse box cover
3. Central storage cover
4. LH and RH dash trims
5. LH and RH front cage trims
6. LH and RH upper dashboard panels
7. Central dashboard
8. LH dashboard trims
9. LH front cage panels
10. LH and RH door panels
11. Front center upper console panel
12. LH front console panel
13. LH console panel
14. LH and RH upper central side panel

15. LH and RH lower central side panel
16. Rear center upper console panel

AMPLIFIER - ALL MODELS

1. Remove all of the following.
    1. Driver and passenger seats
    2. Fuse box cover
    3. Central storage cover
    4. LH and RH dash trims
    5. LH and RH front cage trims
    6. LH and RH upper dashboard panels
    7. Central Dashboard
    8. LH and RH dashboard trims
    9. LH and RH lower dashboard panels
    10. LH and RH front cage panels
    11. LH and RH door handle support panels
    12. Center upper console panel
    13. LH and RH front console panel
    14. LH and RH console panel

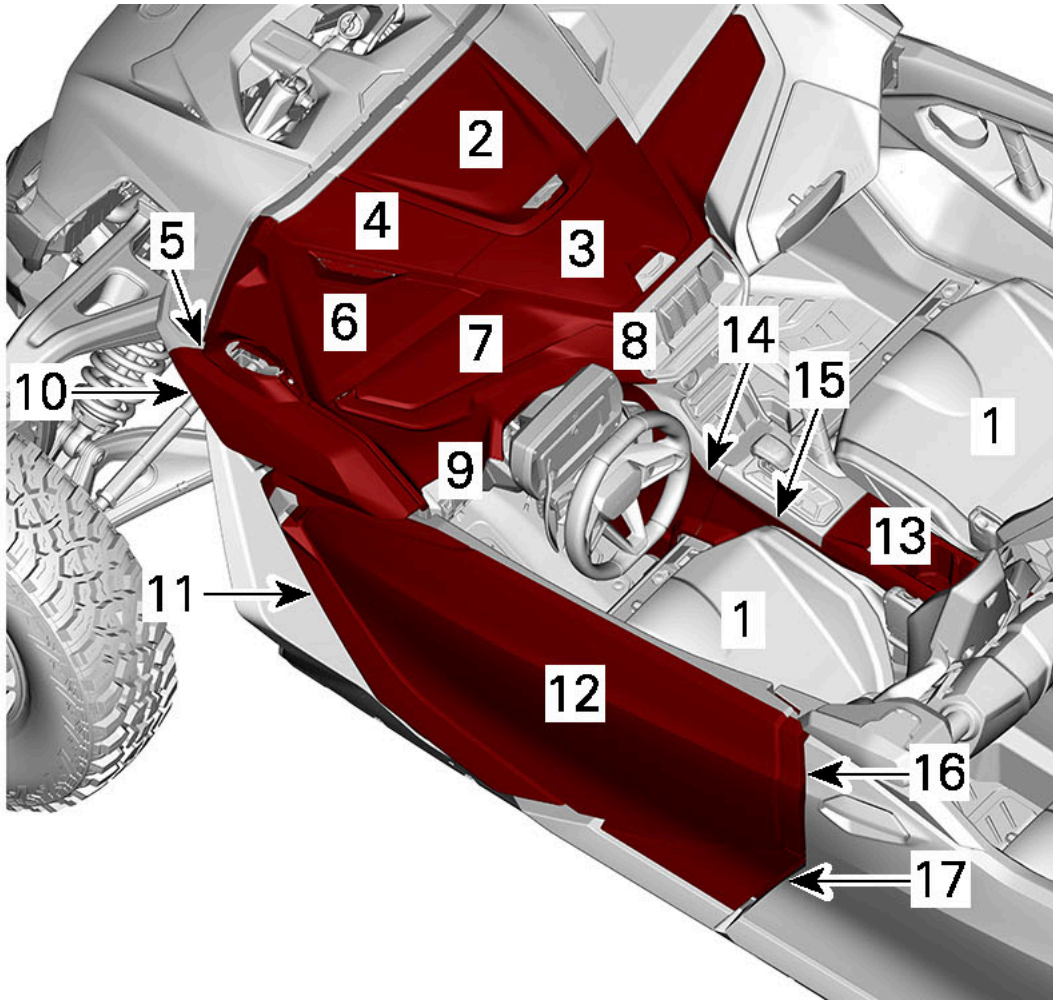

TYPICAL 2-UP MODELS SHOWN - MOSTLY LH SIDE SHOWN AS REFERENCE

1. Driver and passenger seats
2. Fuse box cover
3. Central storage cover

4. LH and RH dash trims
5. LH and RH front cage trims
6. LH and RH upper dashboard panels
7. Central dashboard
8. LH and RH dashboard trims
9. LH and RH lower dashboard panels
10. LH and RH front cage panels
11. LH and RH door handle support panels
12. Center upper console panel
13. LH and RH front console panel
14. LH and RH console panel

INSTALLATION INSTRUCTIONS

NOTICE

Always disconnect the battery before making any electrical modifications. Do not put tools on the battery. Proceed exactly in this order:

- Remove battery cover and positive (+) post cap.

- Disconnect the BLACK cable (-) first.

- Disconnect the RED cable (+) then secure the battery by covering the terminals with an insulating material.

Note

For each step, only LH side shown. Repeat for RH side if needed.

NOTICE

Be careful not to pinch any wires and/or hoses between parts. Make sure to avoid contact of any wires and/or hoses with sharp edges, hot surfaces and moving parts.

Note

For all wiring, do not tighten any of the cable ties during installation. Tightening the cable ties to be done only at the end of installation.

MAIN HARNESS INSTALLATION FOR ALL MODELS

1. Route the main harness [P16] and secondary harness [P17] along the driver's side console, under the seats and then to the remaining dash pieces and finally up to the amplifier.

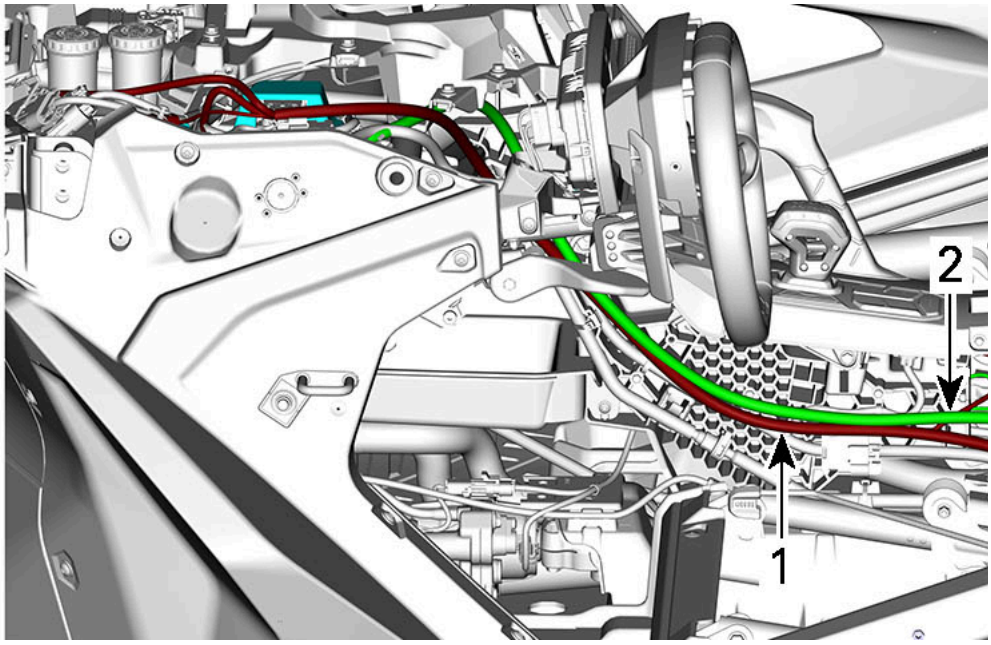

TYPICAL 2-UP MODELS SHOWN

1. Main harness (RED)
2. Secondary harness (LIME GREEN)

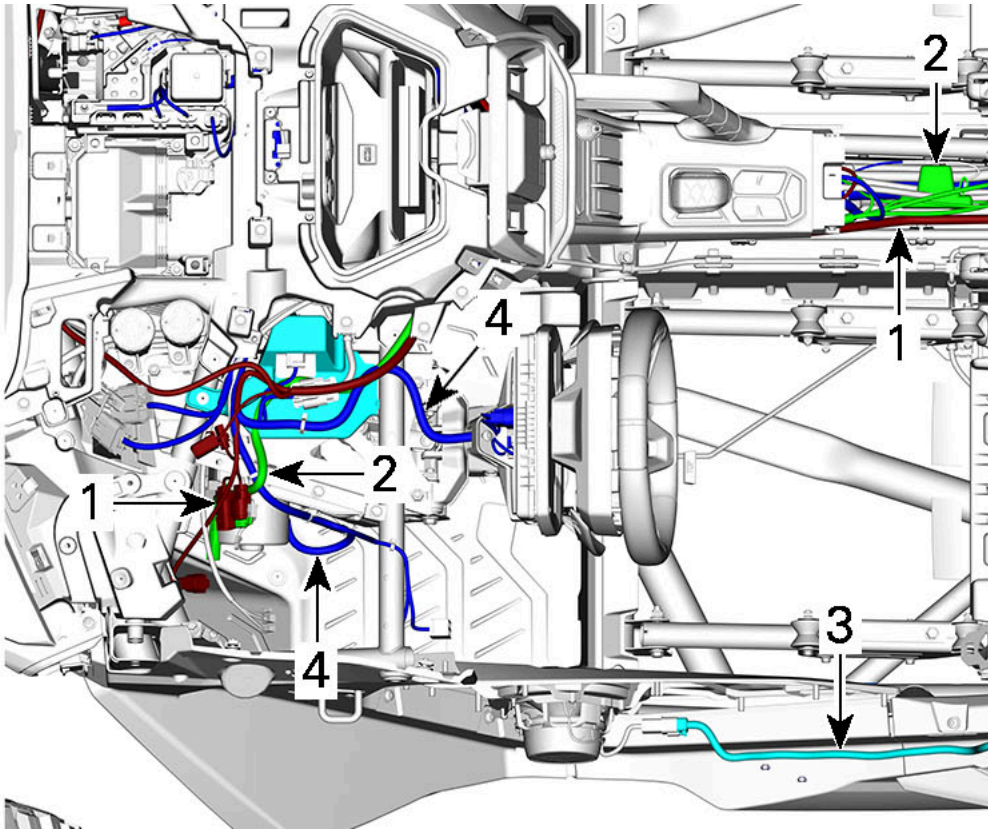

TYPICAL 2-UP MODELS SHOWN

1. Main harness [P16] (RED)
2. Secondary harness [P17] (LIME GREEN)
3. Door harness [P14] (CYAN BLUE)
4. Vehicle main harness (DARK BLUE)

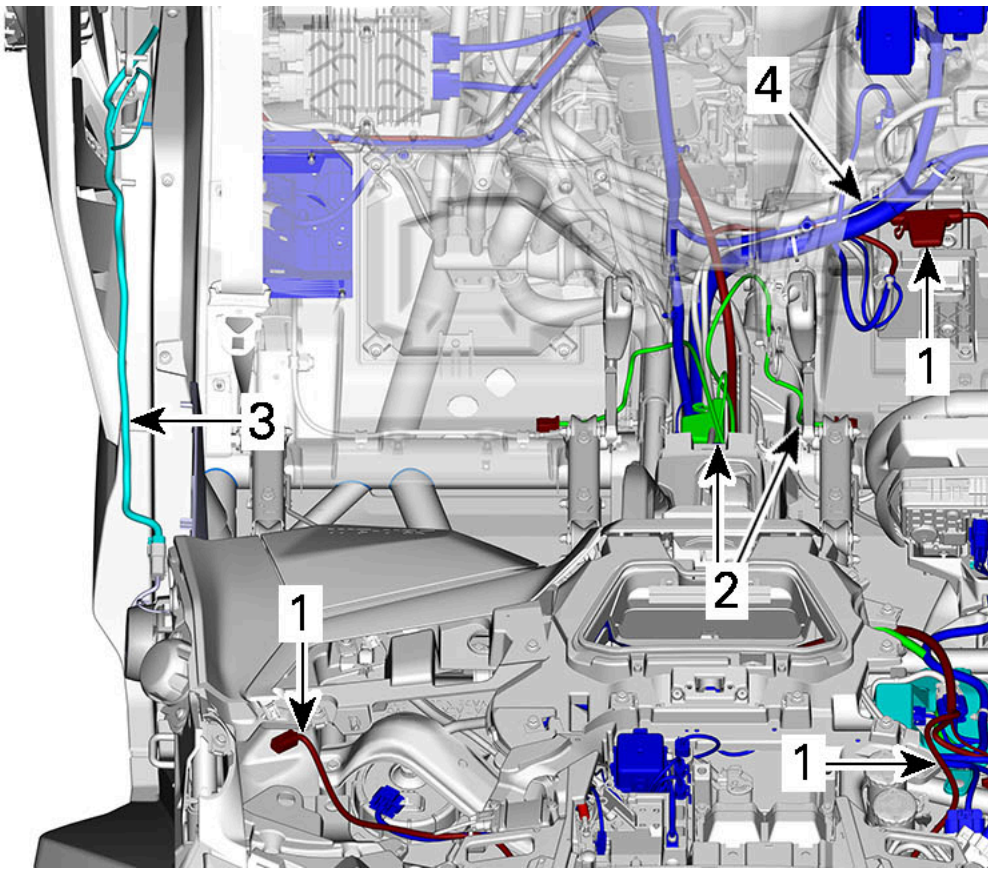

TYPICAL 2-UP MODELS SHOWN

1. Main harness [P16] (RED)
2. Secondary harness [P17] (LIME GREEN)
3. Door harness [P14] (CYAN BLUE)
4. Vehicle main harness (DARK BLUE)

Note

The connectors are identified with colored tape around the harness for easier installation.

1. **WHITE = LH front speaker**
2. **GREY = LH Front Speaker**

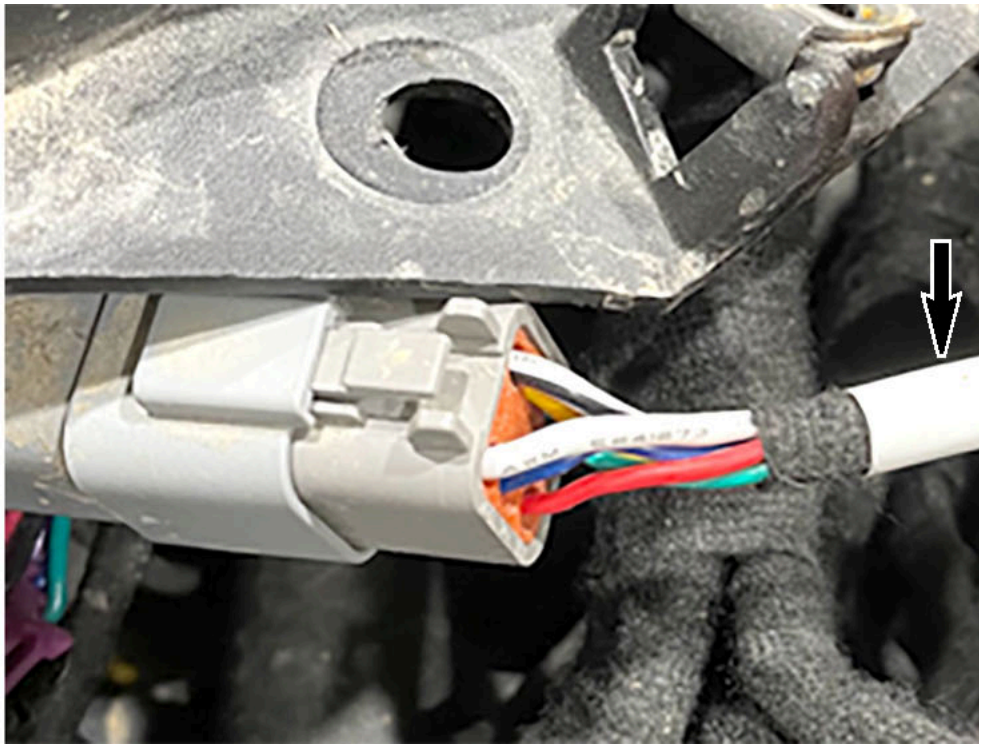

Note

Make sure both harnesses runs to the left of the yaw rate sensor protector.

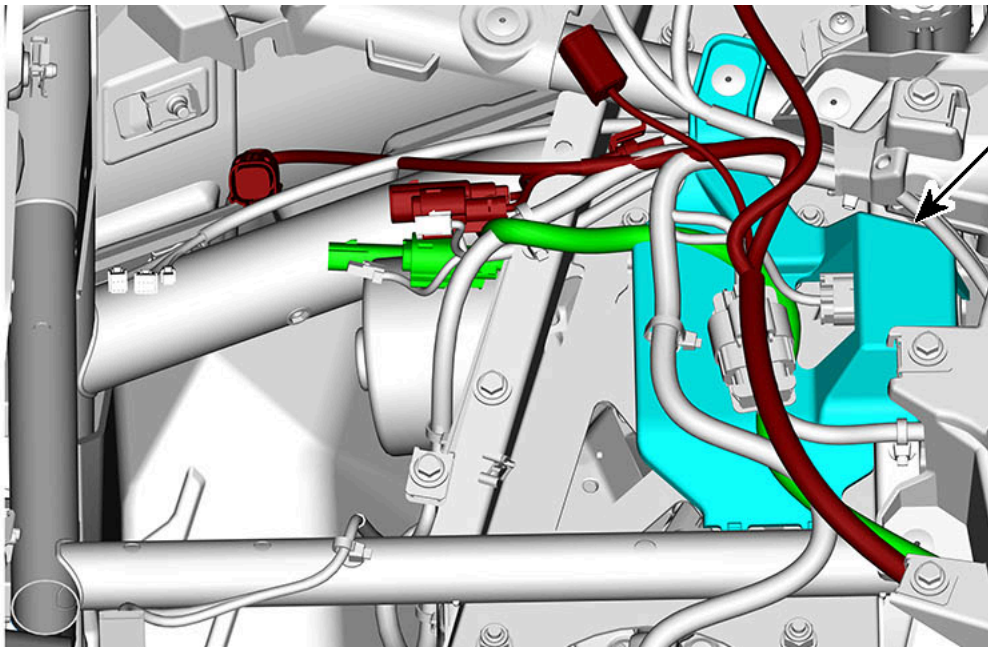

1. Yaw rate sensor protector

2. Bring the other end of the cable down and follow the vehicle main harness to the hole in the bottom of the rear firewall and to the battery.

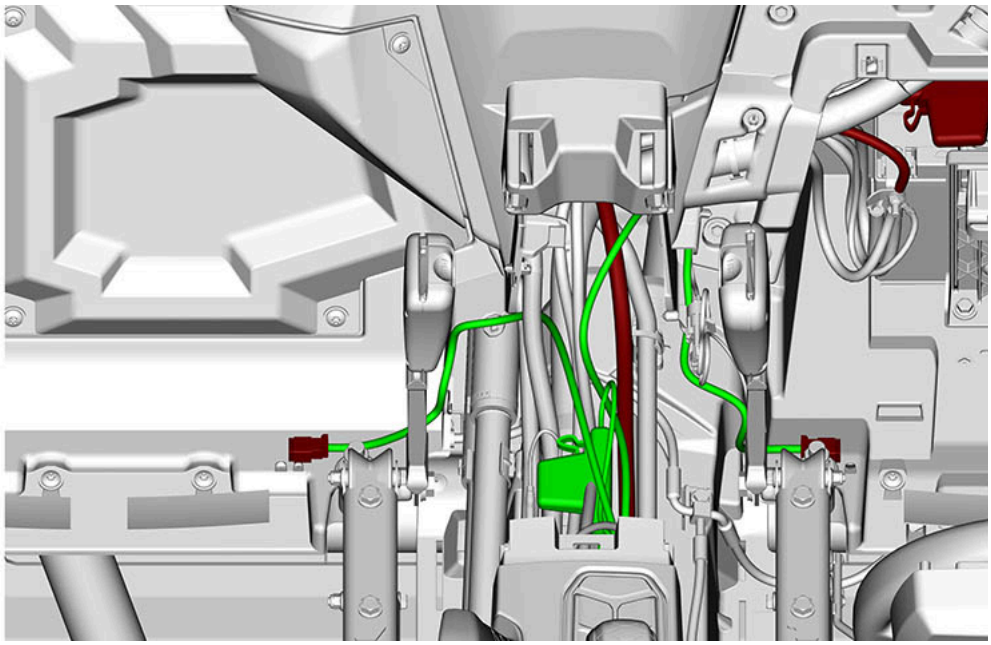

3. Find the cable at the exit of the hole in the rear bulkhead and bring the main harness [P16] rear portion up along the vehicle's main electrical harness. Bring one half to the left end of the frame and the other half to the right end of the frame. Secure them with cable ties.

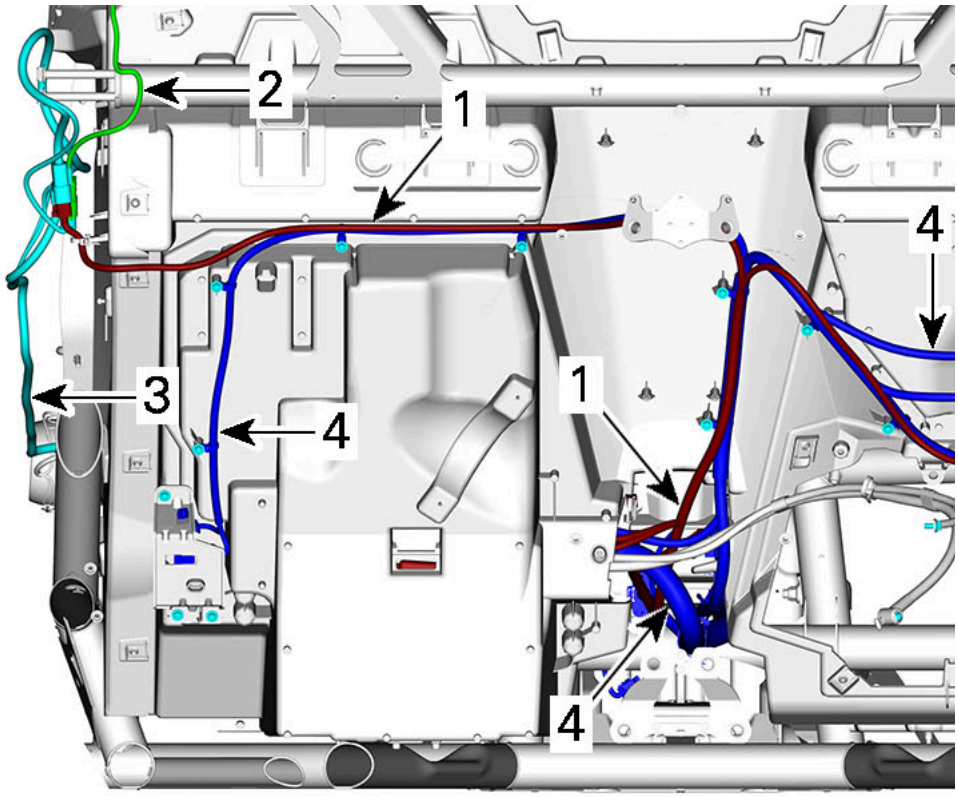

2-UP MODELS SHOWN

1. Main harness [P16] (RED)
2. Rear speaker harness (LIME GREEN)
3. Door harness [P14] (CYAN BLUE)
4. Vehicle main harness (DARK BLUE)

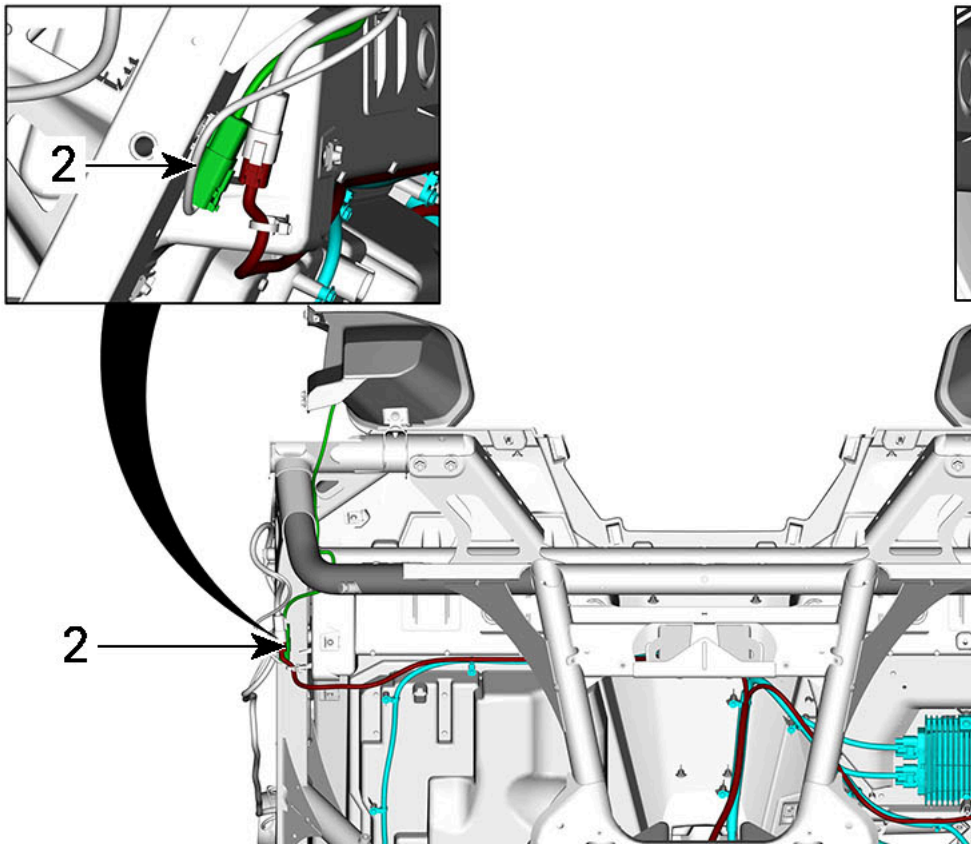

2-UP MODELS SHOWN

1. PURPLE = LH rear speaker
2. GREEN = RH rear speaker

AMPLIFIER SUPPORT ASSEMBLY INSTALLATION

ALL MODELS

Note

If vehicle is equipped with Intermittent Wiper and Washer Kit (P/N 715007173), windshield washer tank must be installed before amplifier. Refer to the appropriate *Intermittent Wiper and Washer Kit Instruction Sheet* 487803955.

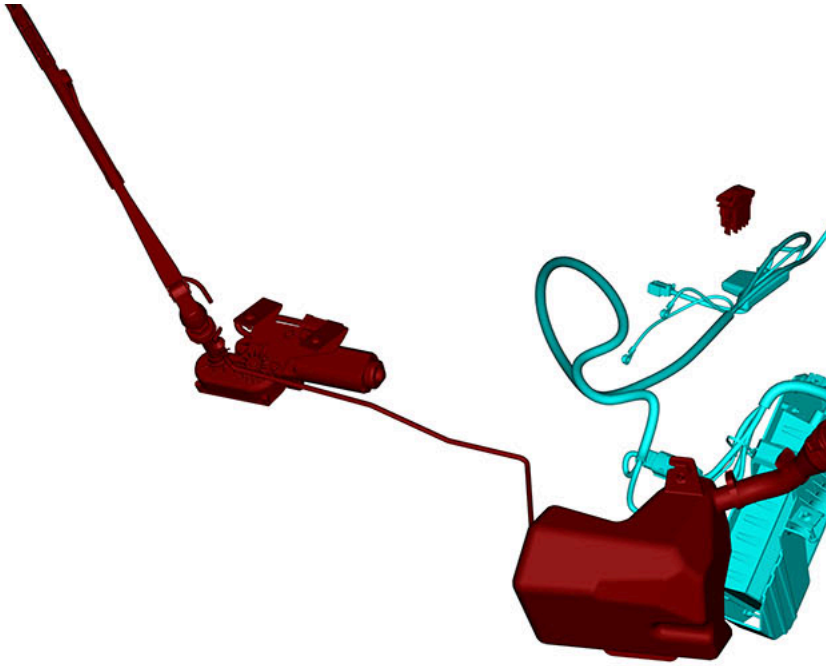

1. Insert three (3) panel nut [P9b] on amplifier support assembly. The threaded section of the panel nut needs to face upward.

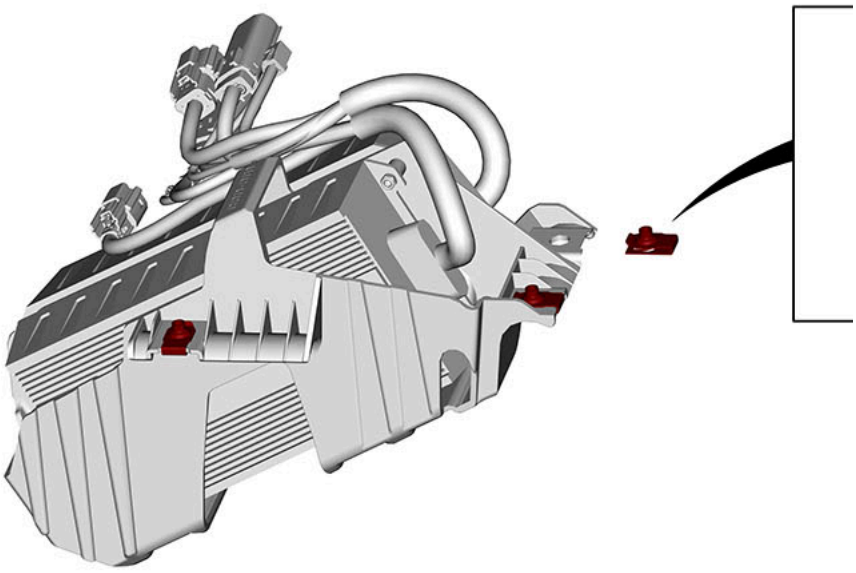

1. Threaded section

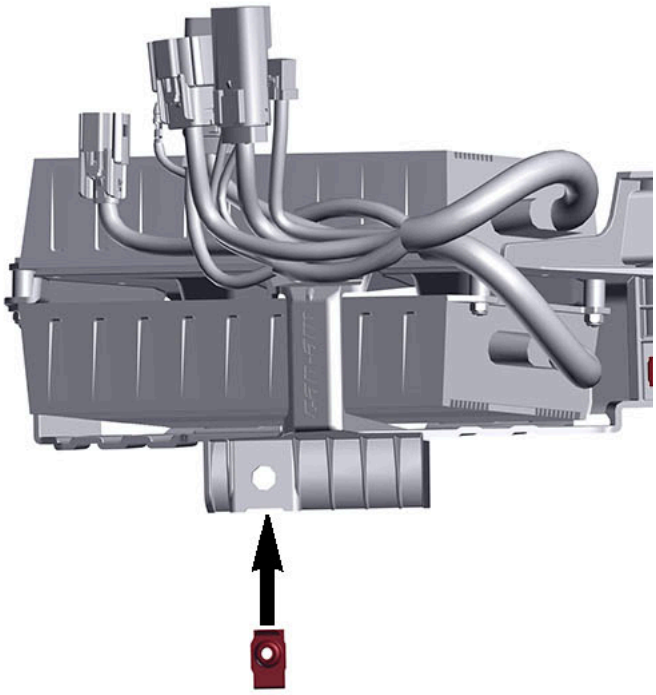

TYPICAL AMPLIFIER SUPPORT ASSEMBLY

2. Install the amplifier support assembly [P8] on the frame tubes under the dashboard and secure using two M6 X 45 hex. screws [P9a]. Tighten to specification.

TIGHTENING TORQUE	
M6 X 45 Hex. Screw [P9a]	11 ± 1 N•m (97 ± 9 lbf•in)

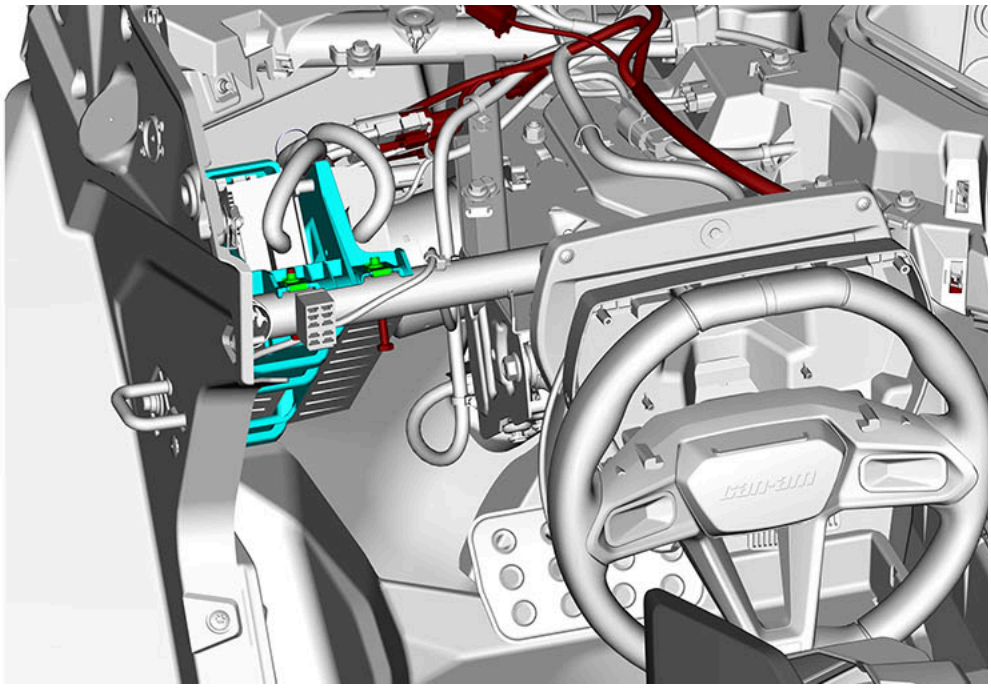

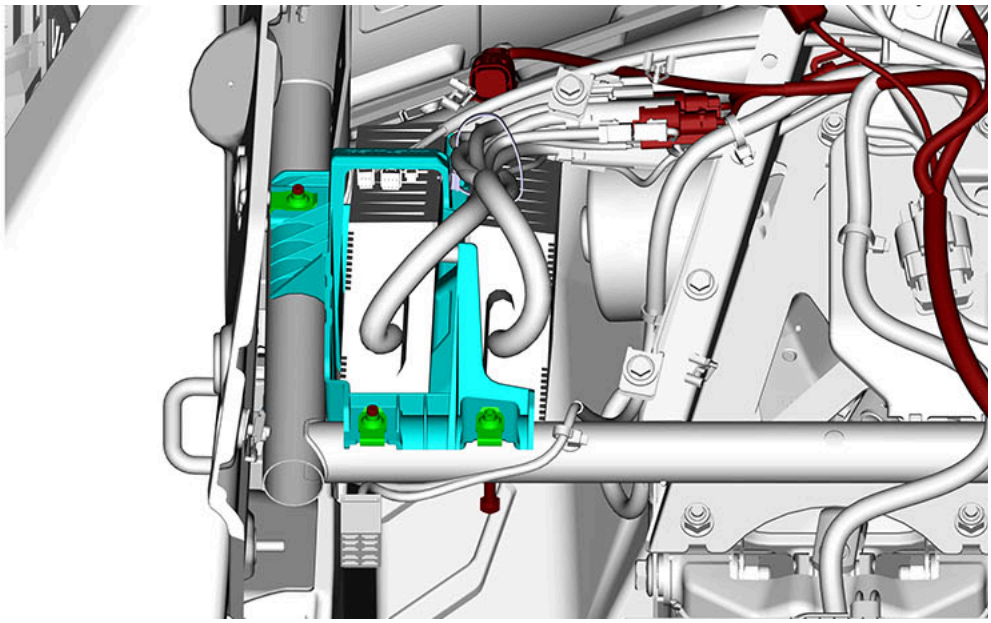

3. Using the 9.5 mm (3/8 in) drill bit [T1], drill and remove the two (2) rivets from the LH front mudguard in order to be able to pull on the panel and have enough space to insert the M6 X 45 hex. screw [P9a].

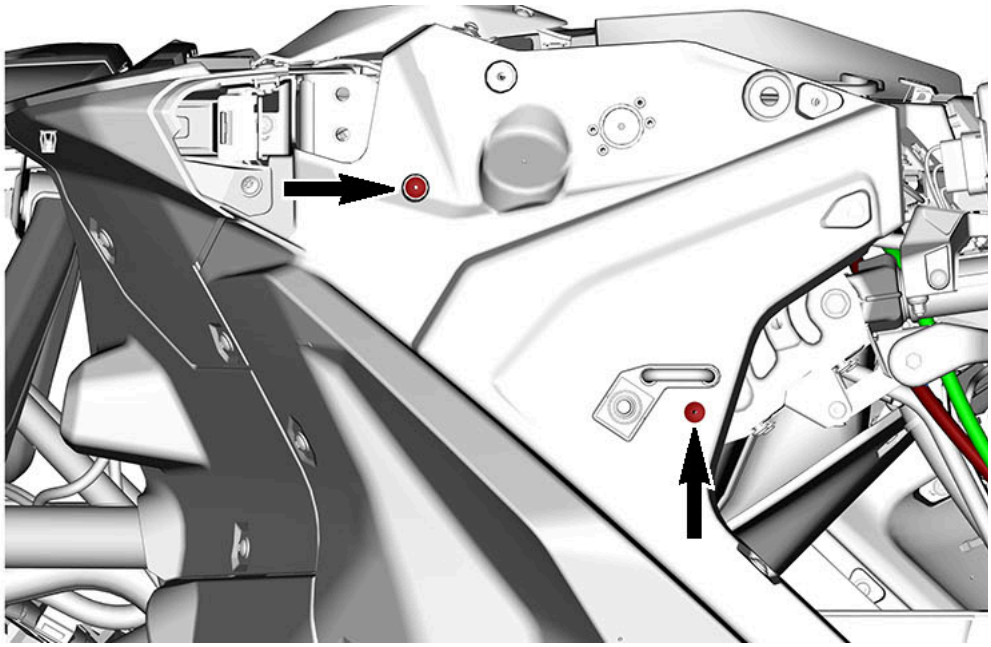

4. Insert the third M6 X 45 hex. screw [P9a]. Tighten to specification.

TIGHTENING TORQUE	
M6 X 45 Hex. Screw [P9a]	11 ± 1 N•m (97 ± 9 lbf•in)

5. Connect these four (4) connectors to the amplifiers.

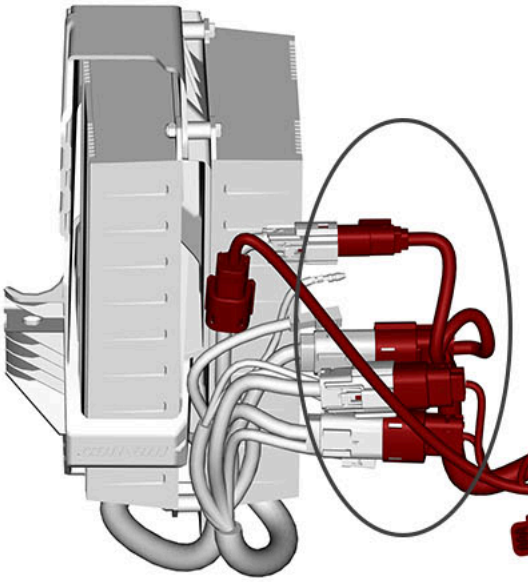

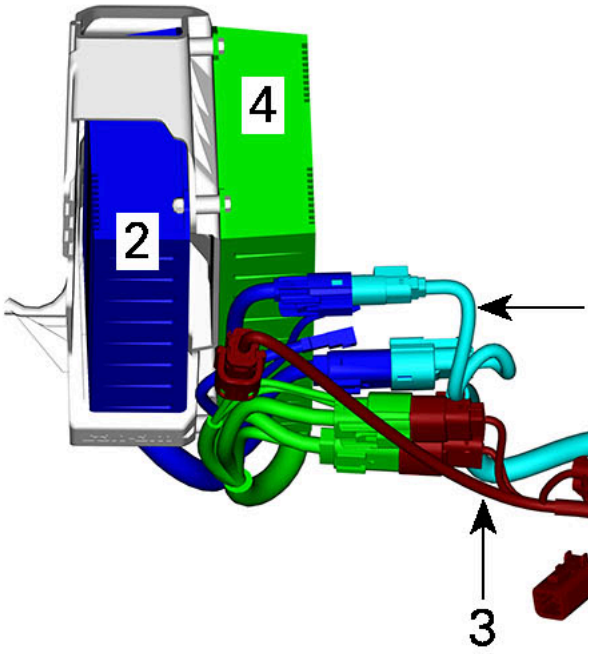

1. Subwoofer harness [P18]
2. Subwoofer amplifier
3. Primary harness [P16] or [P17]
4. Audio amplifier

6. Install and connect the electrical harness to the vehicle accessory connectors (vehicle connectors may be wrapped together).

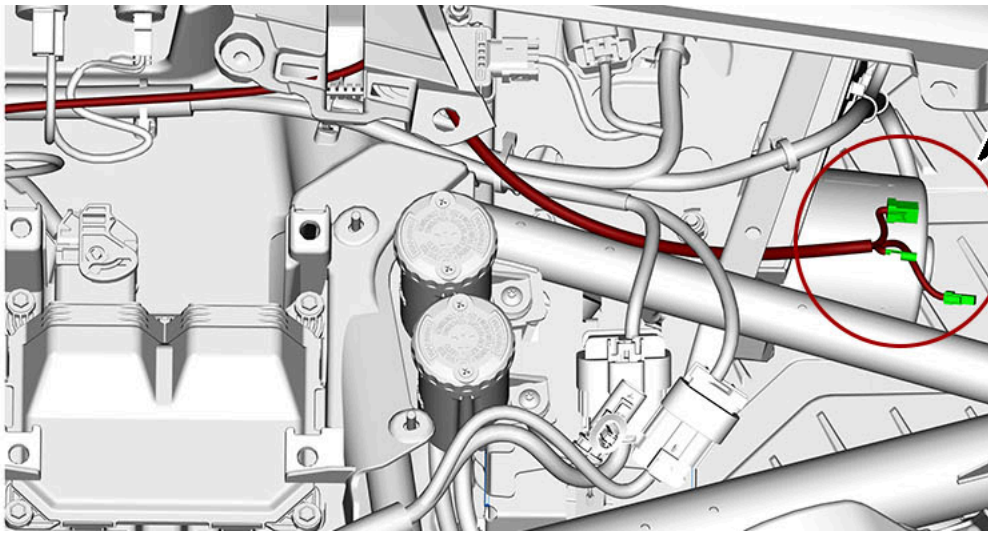

VEHICLE CONNECTORS

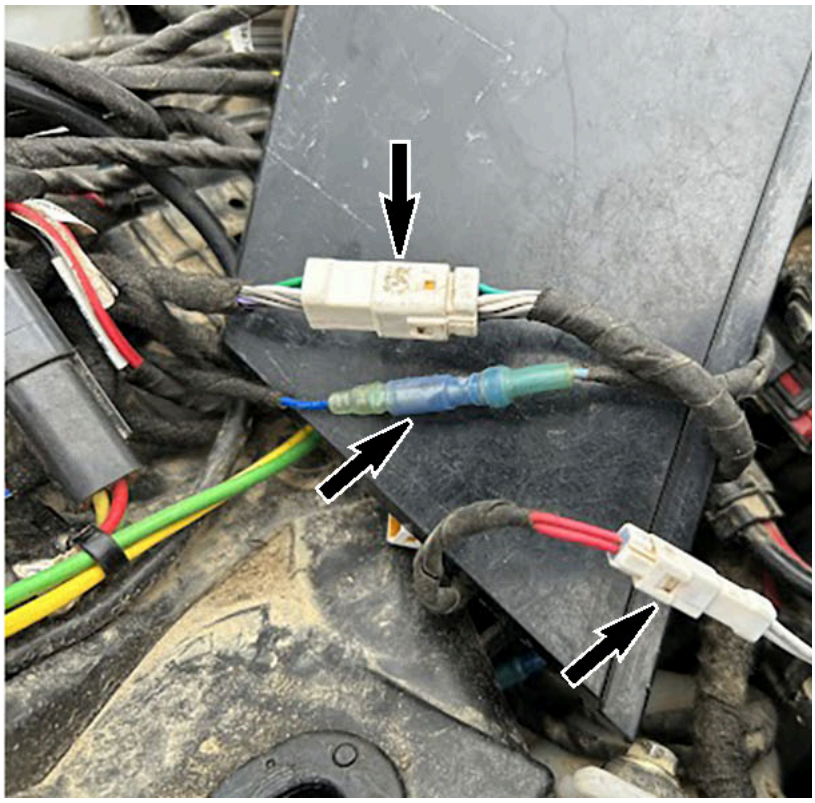

> **Note**
>
> **If vehicle is equipped with the *Can-Am JL Audio System - Level 4*, harness must be installed in series with *Audio Roof connectors*.**



7. Plug the LED control module to primary harness [P16].

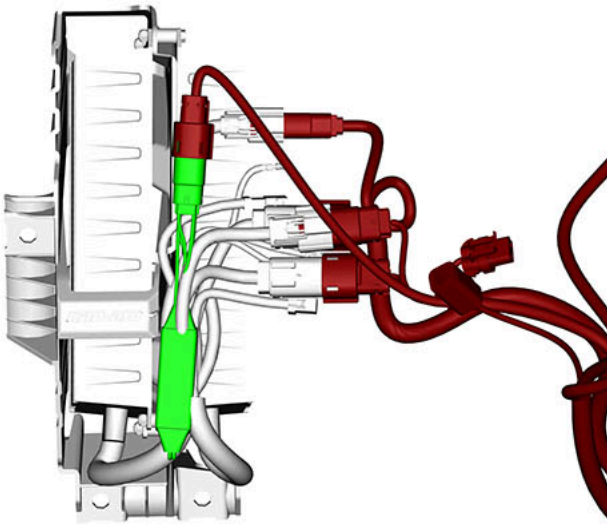

SUBWOOFER INSTALLATION

ALL MODELS

1. Install the two subwoofers [P7] under the seats and secure using four (4) M6 X 12 hex. flanged screws [P10c] and four (4) M6 stainless washers [P10d] to the frame. Make sure that the threaded rods pass through the holes provided and secure the wire to the floor using two (2) cable ties with dart [P9c]. Tighten to specification.

TIGHTENING TORQUE	
M6 X 12 Hex. Flanged Screw [P10c]	11 ± 1 N•m (97 ± 9 lbf•in)

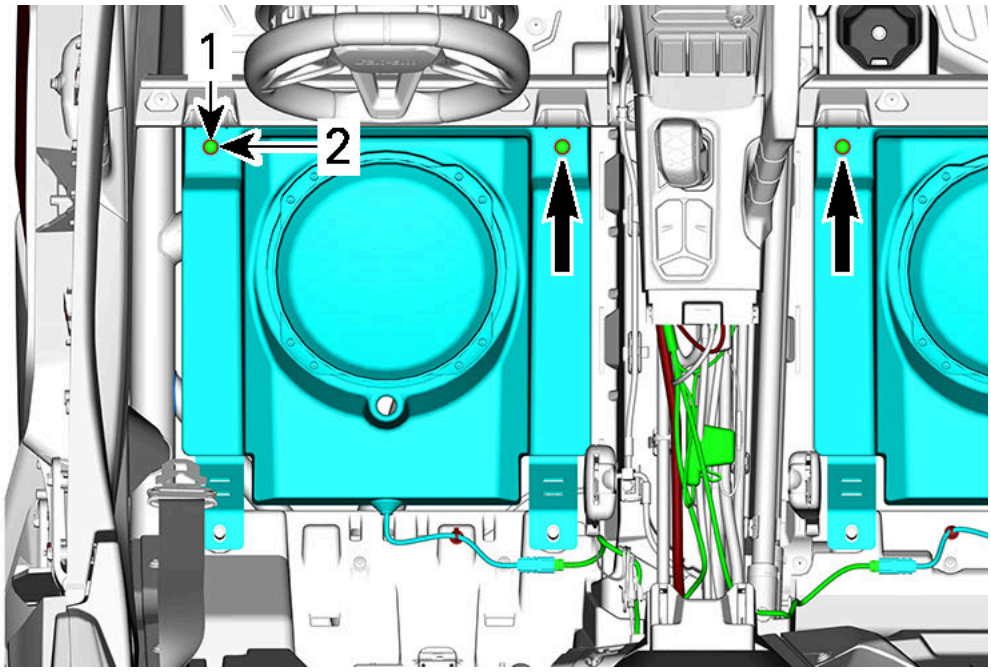

1. M6 X 12 hex. flanged screw [P10c]
2. M6 stainless washer [P10d]

2. Connect subwoofer speaker harnesses to secondary harness [P18].

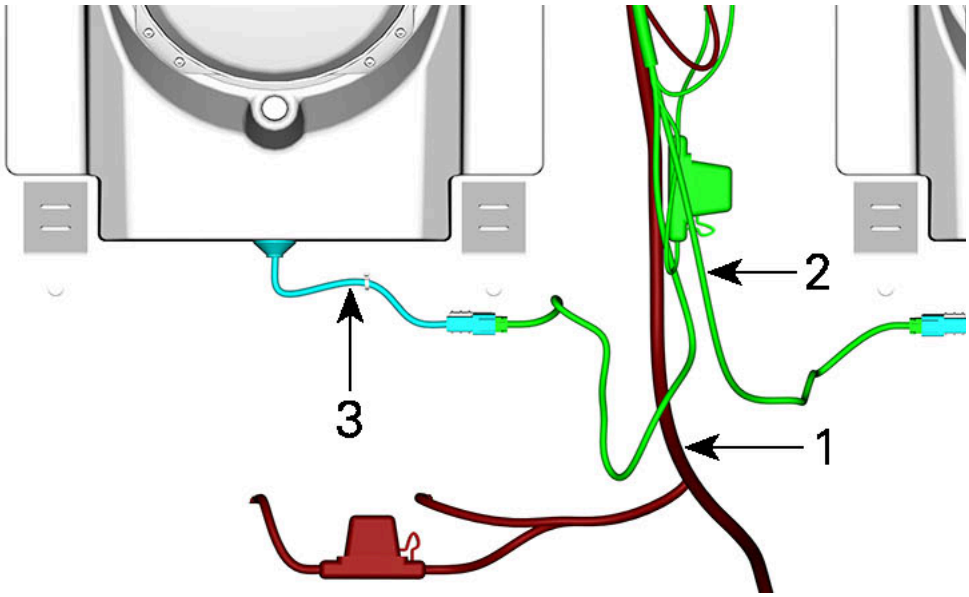

1. Main harness [P16] or [P17]
2. Secondary harness [P18]
3. Subwoofer speaker harness

REAR SPEAKER INSTALLATION

ALL MODELS

1. Install the four (4) panel nuts [P13c] on the LH rear speaker [P5]. Panel nuts flat section to face outward of the speaker.

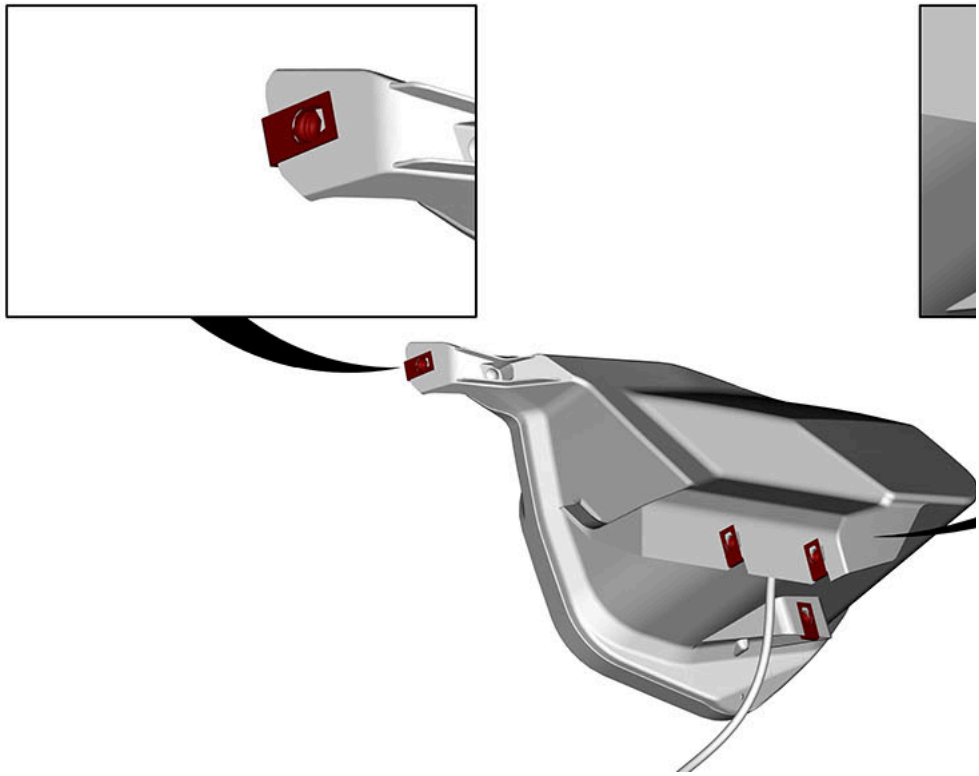

2. Install the speaker support [P13a] and secure using one M6 X 16 Hex. Torx flanged screw [P13b]. Hand tighten only.

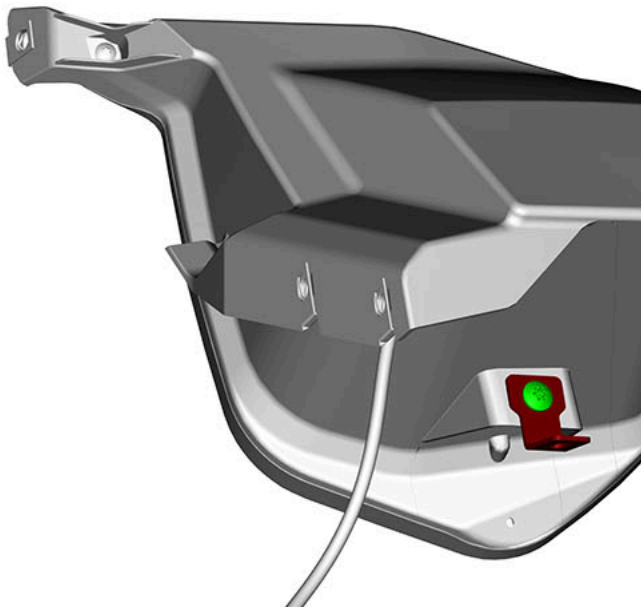

3. Install the LH rear speaker [P5] and secure using one M6 X 16 Torx flanged screw [P13b] and two (2) M6 X 20 S.Grip hex. flanged screw [P13d]. Hand tighten only.

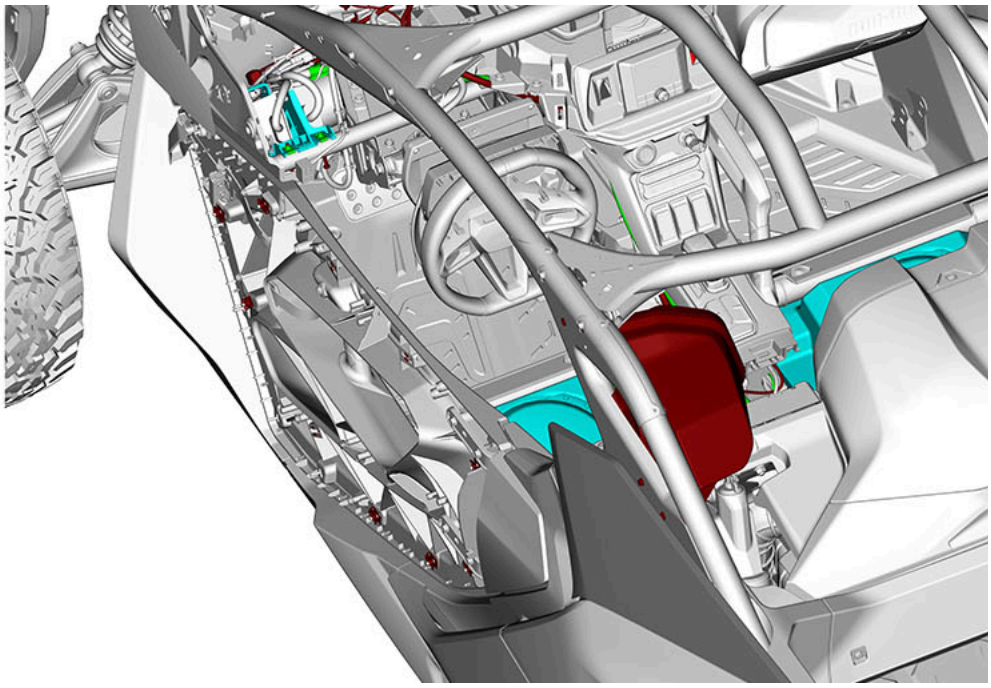

TYPICAL

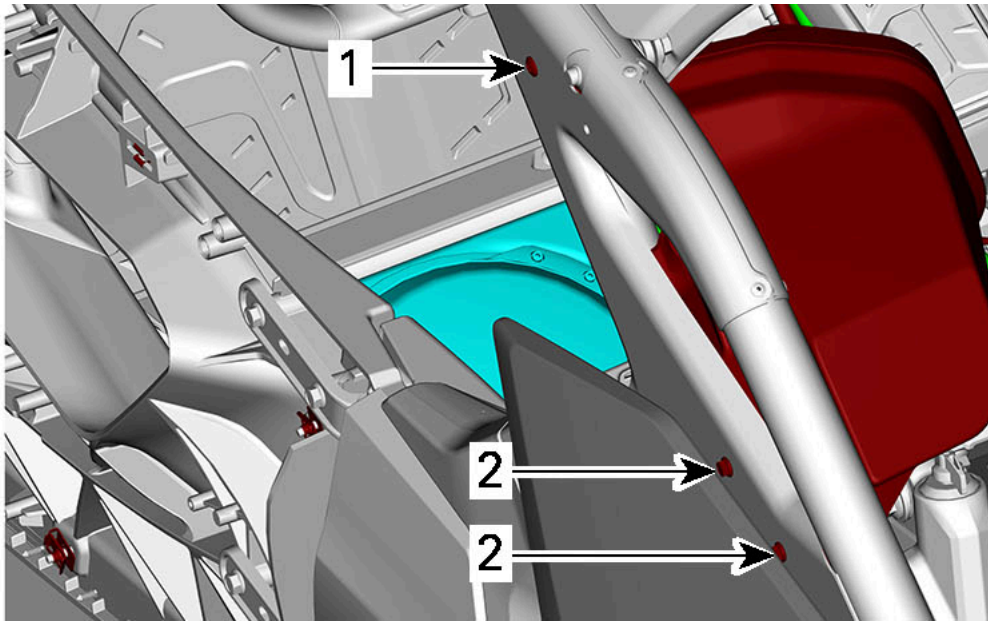

TYPICAL

1. M6 X 16 Torx flanged screw [P13b]
2. M6 X 20 S.Grip hex. flanged screw [P13d]

4. Secure the speaker support [P13a] on vehicle using one M6 X 16 Torx flanged screw [P13b] and one M6 stainless washer. Tighten the following screws to specification.

TIGHTENING TORQUE	
M6 X 16 Torx Flanged Screw [P13b]	2.5 ± 0.5 N•m (22 ± 4 lbf•in)
M6 X 20 S.Grip Hex. Flanged Screw [P13d]	2.5 ± 0.5 N•m (22 ± 4 lbf•in)

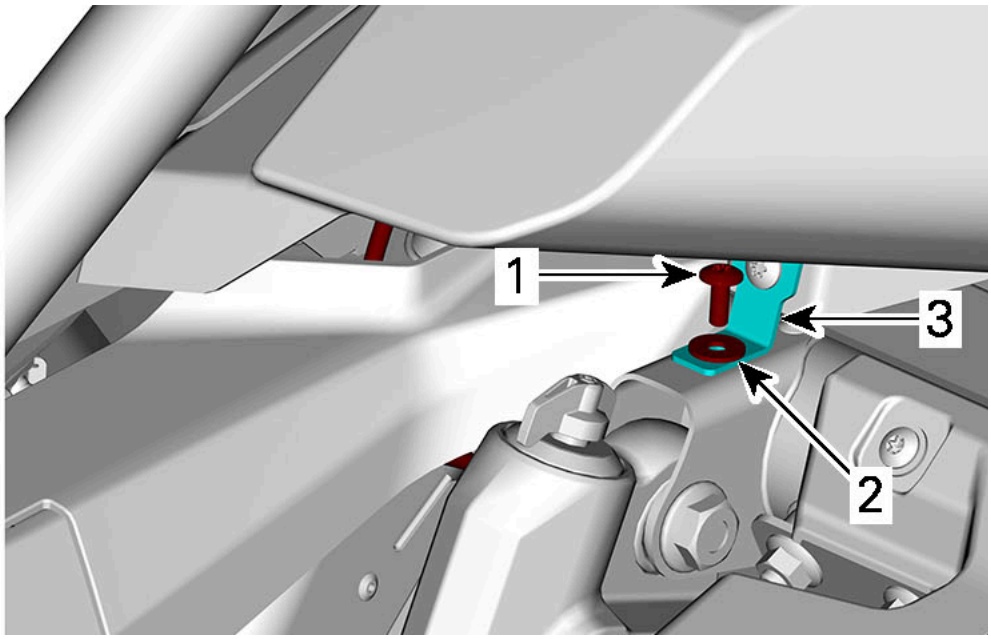

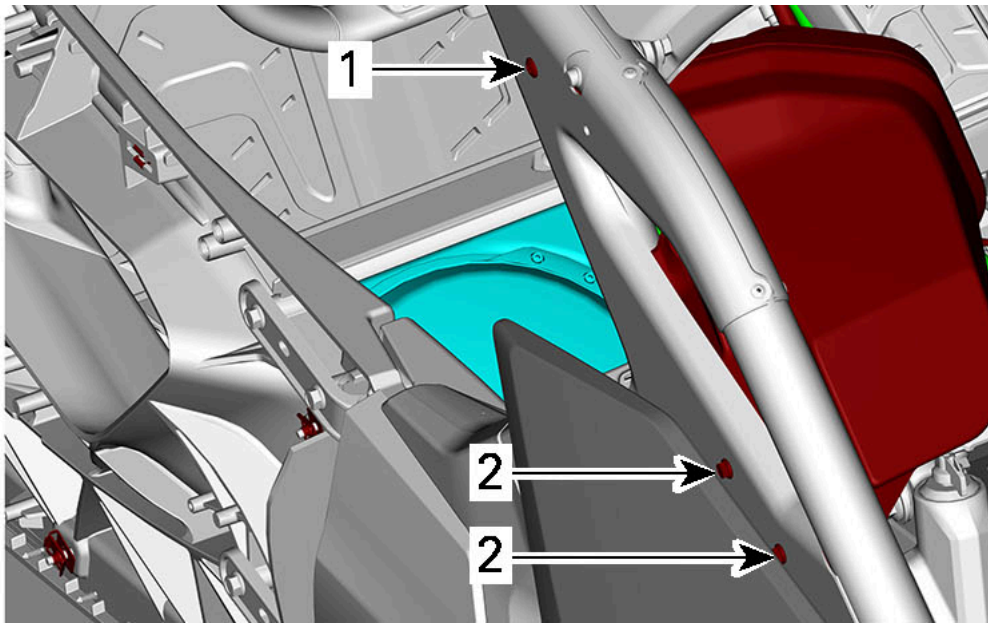

TYPICAL

1. M6 X 16 Torx flanged screw [P13b]
2. M6 X 20 S.Grip hex. flanged screw [P13d]

5. Secure the speaker harness to the frame using the clip already attached to the speaker harness connector. Only push to secure in frame holes.

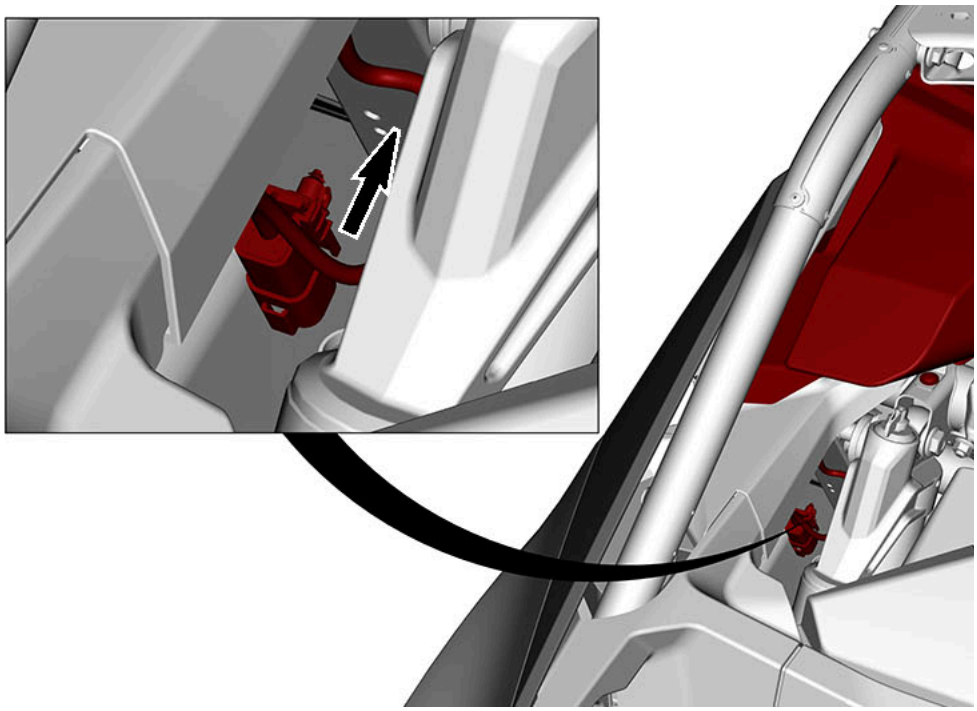

TYPICAL

6. Route the main harness rear end behind the firewall by running it up along the cage then secure the two harnesses together by connecting them. Secure the main harness rear end to the LH rear bulkhead using the cable tie with clip [P13e].

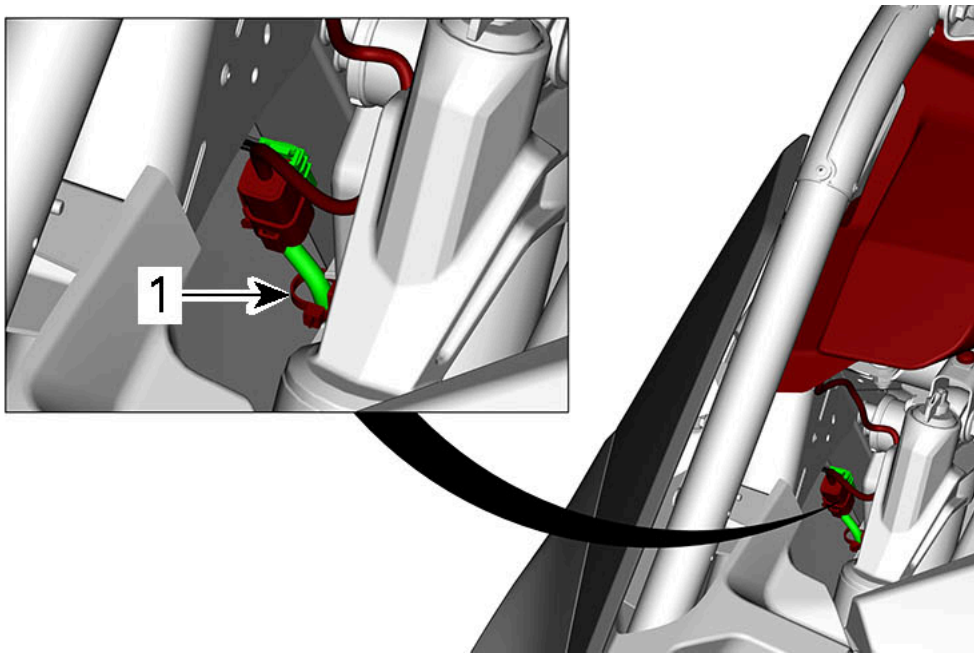

TYPICAL

1. Cable tie with clip [P13e]

DOOR SPEAKERS INSTALLATION

2-UP MODELS

1. Using the 16 mm (5/8 in) drill bit [T2], drill 9 holes in the center of these circular ribs from the outside of the LH and RH doors.`

NOTICE
Do not drill too deep to avoid damaging other components.

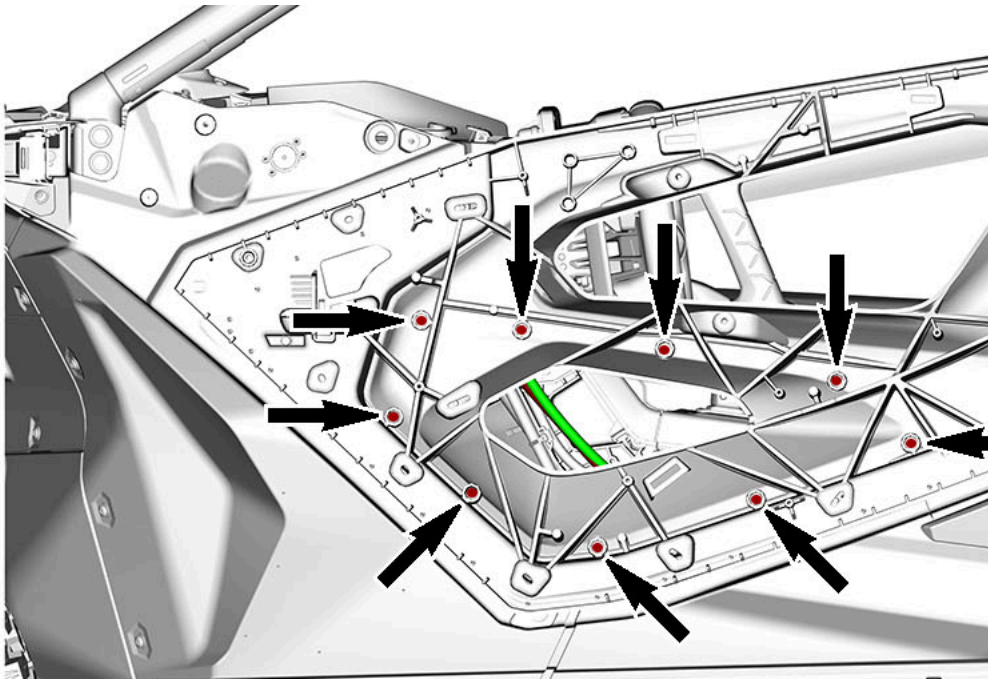

2. Insert the left center speaker in the LH door by aligning the posts behind the speaker into the previously drilled holes.



3. Secure the LH door speaker using nine K50 X 16 flanged Plastite screws [P12a] and nine flat washers [P12b]. Tighten to specification.

TIGHTENING TORQUE	
M6 X 45 Hex. Screw [P9a]	1.1 ± 0.1 N•m (10 ± 1 lbf•in)

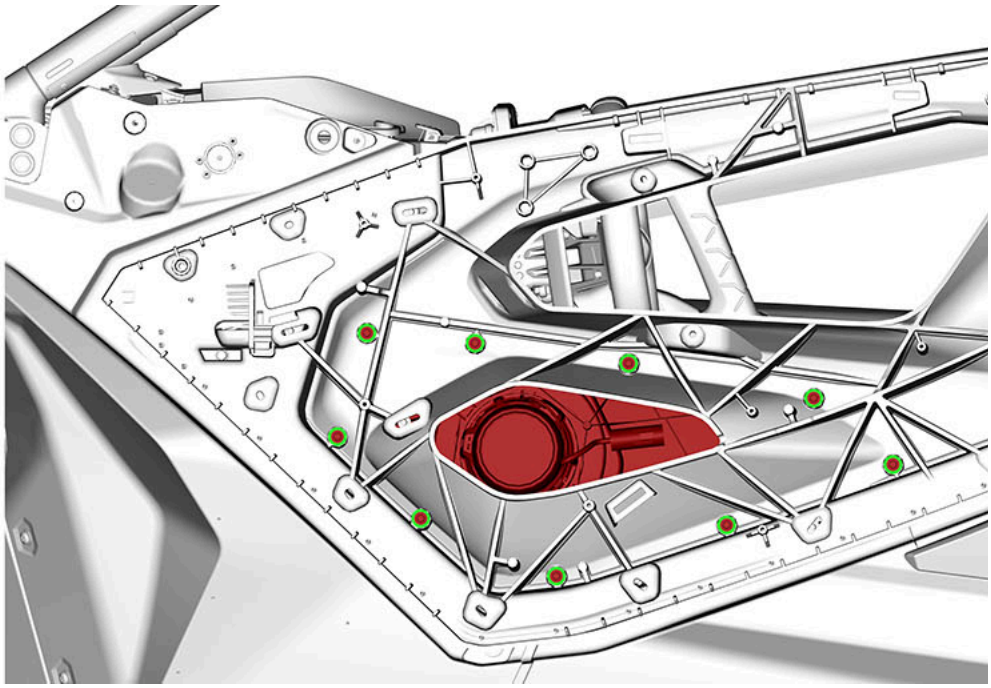

4. Connect the cable to the speaker door, bring it to the rear of the door and secure it all the way up using five (5) cable ties with mount hole [P12c], five (5) K50 X 16 flanged Plastite screws [P12a] and three (3) cable ties with clip [P12d]. Pass through the hole under the upper hinge and then route the wire between the chassis and the body panels rearward to join the rear speaker connector.

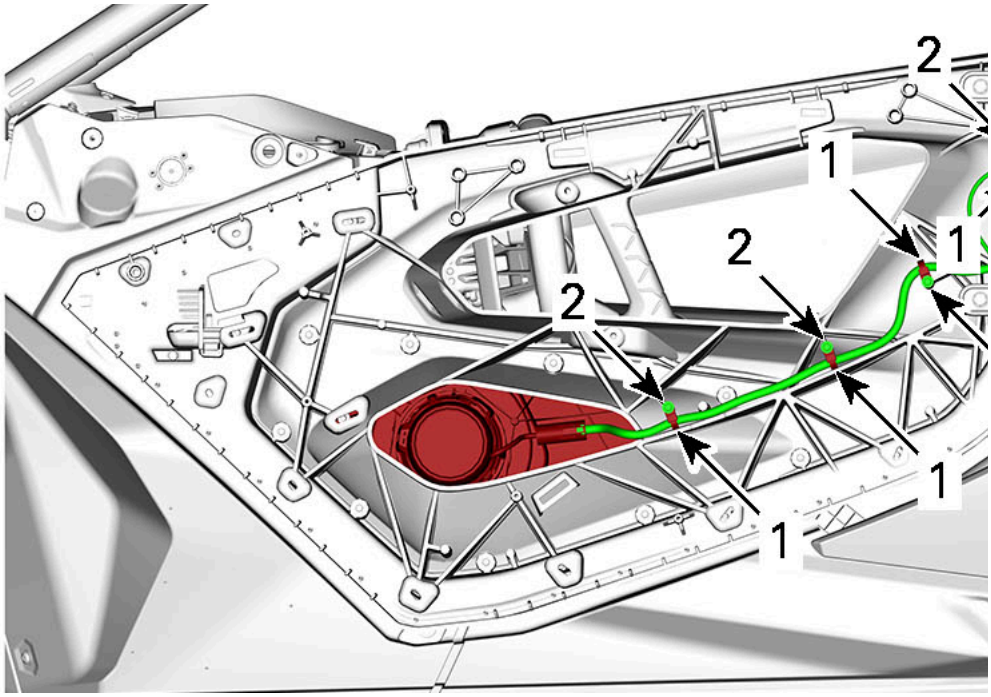

1. Cable tie with mount hole [P12c]
2. K50 X 16 flanged Plastite screw [P12a]
3. Cable tie with clip [P12d]

Note
Make sure to properly route and secure the rear section of the harness so it does not hang loose inside the body panel causing premature wear.

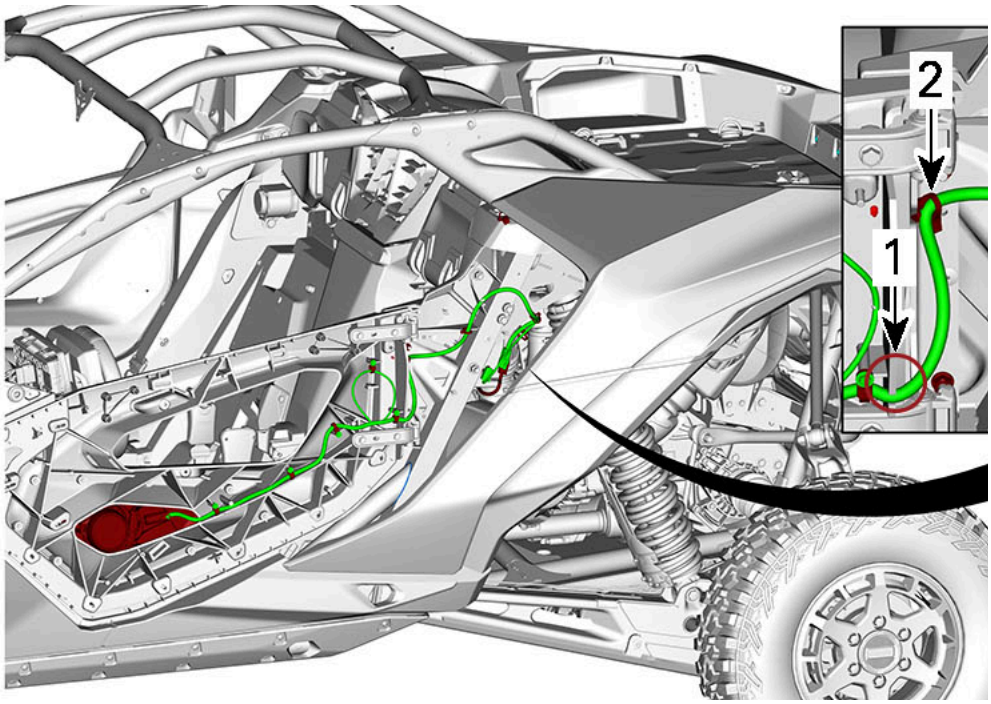

1. Notch in door frame to insert speaker door harness
2. Cable tie with clip [P12d]

5. Make the connections between the harness coming from the LH and RH door speaker harnesses [P3] and [P4] to the one coming from the LH and RH rear speaker harnesses [P5] and [P6] and the main harness [P16] which connects to the doors speaker harnesses female connectors.

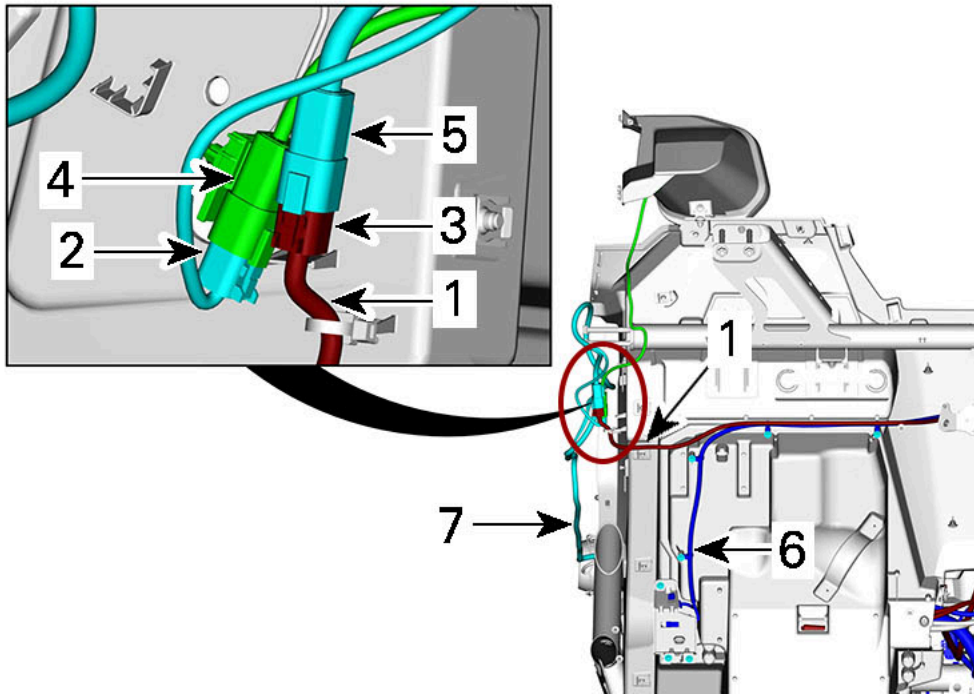

1. Main harness [P16] (RED)
2. Male connector from LH speaker door to LH rear speaker harness
3. Male connector from main harness [P16] to LH speaker door harness
4. Female connector from rear speaker harness (LIME GREEN)
5. Female connector from LH speaker door harness to main harness [P16] male connector
6. Vehicle main electrical system (DARK BLEU)
7. LH speaker door harness (CYAN BLUE)
8. RH speaker door harness (CYAN BLUE)

MAX MODELS

1. Using the 16 mm (5/8 in) drill bit [T2], drill 9 holes in the center of these circular ribs from the outside of the LH and RH doors.

Note
Do not drill too deep to avoid damaging other components.

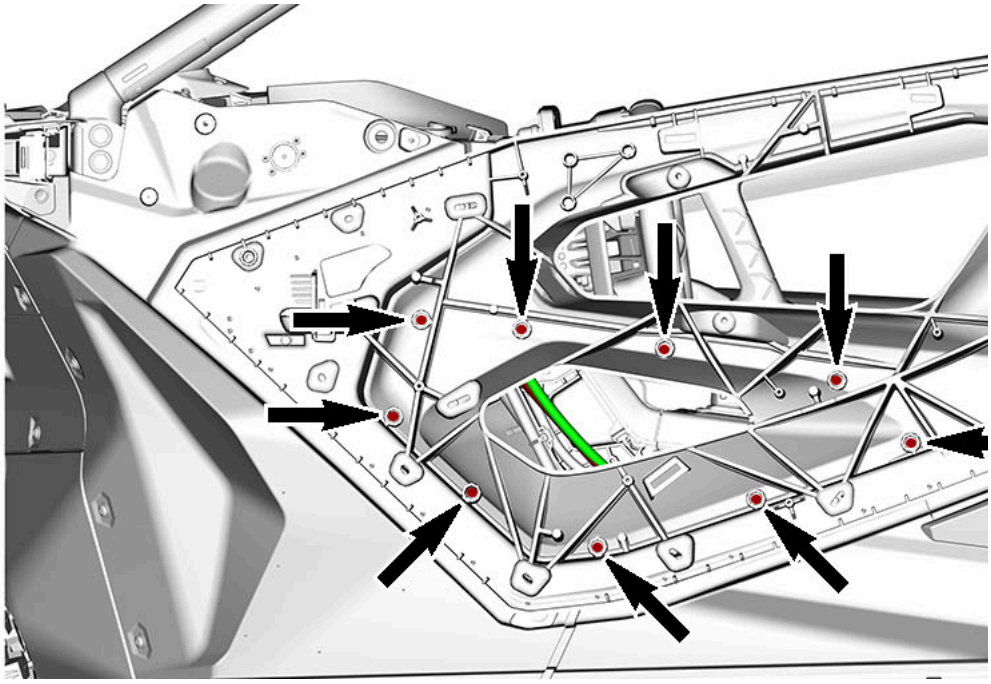

TYPICAL

2. Insert the left center speaker in the LH door by aligning the posts behind the speaker into the previously drilled holes.



TYPICAL

3. Secure the LH door speaker using nine (9) K50 X 16 flanged Plastite screws [P12a] and nine flat washers [P12b]. Tighten to specification.

TIGHTENING TORQUE	
K50 X 16 Flanged Plastite Screw [P12a]	1.1 ± 0.1 N•m (10 ± 1 lbf•in)

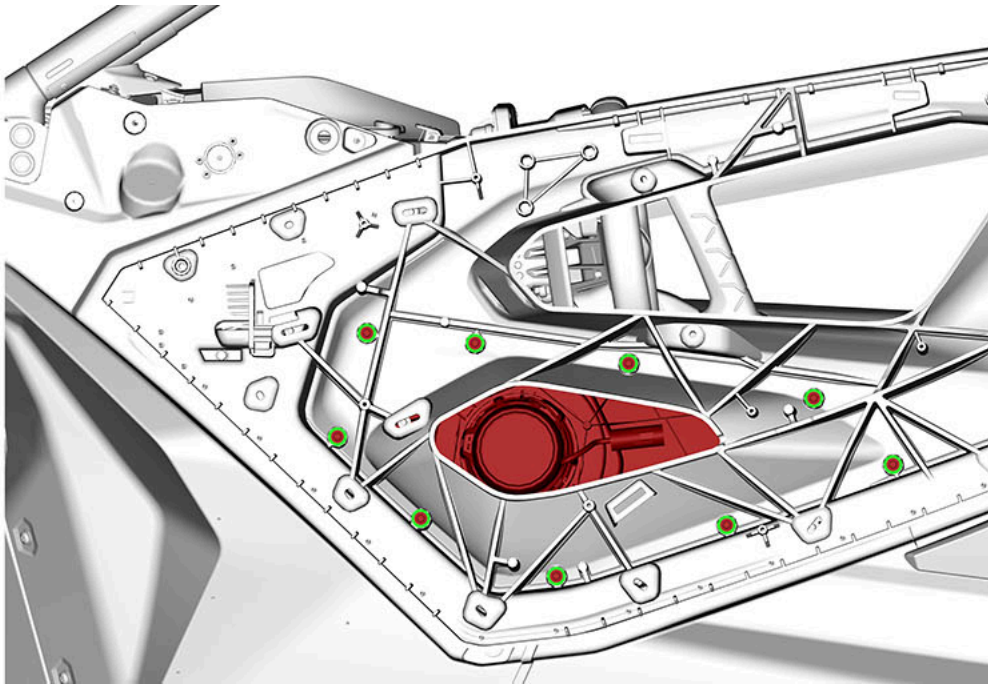

TYPICAL

4. Connect the cable to the speaker door, bring it to the rear of the door and secure it all the way up using five (5) cable ties with mount hole [P12c], five (5) K50 X 16 flanged plastite screws [P12a] and three (3) cable ties with clip [P12d]. Pass through the hole under the upper hinge and then route the wire down to the middle frame.

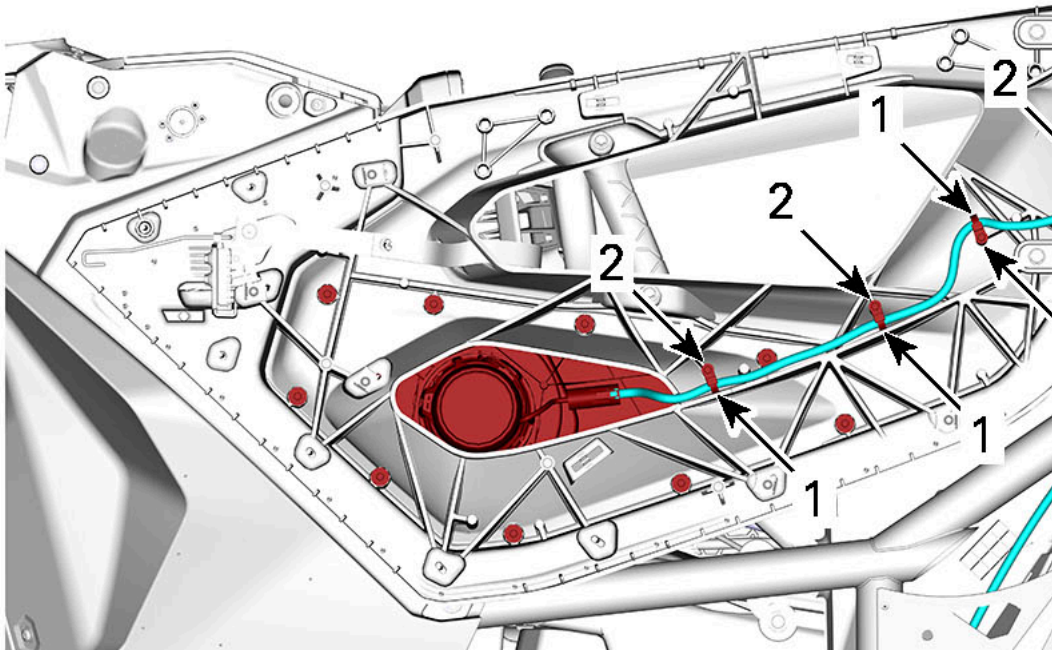

SOME COMPONENTS REMOVED FOR CLARITY

1. Cable tie with mount hole [P12c]
2. K50 X 16 flanged Plastite screw [P12a]
3. Cable tie with clip [P12d]

5. Follow the path at the rear of the front bench and which goes into the central console all the way to the back. Use some extra 368 mm cable ties along the way and at the back of the Rear Baffle to secure the harness.

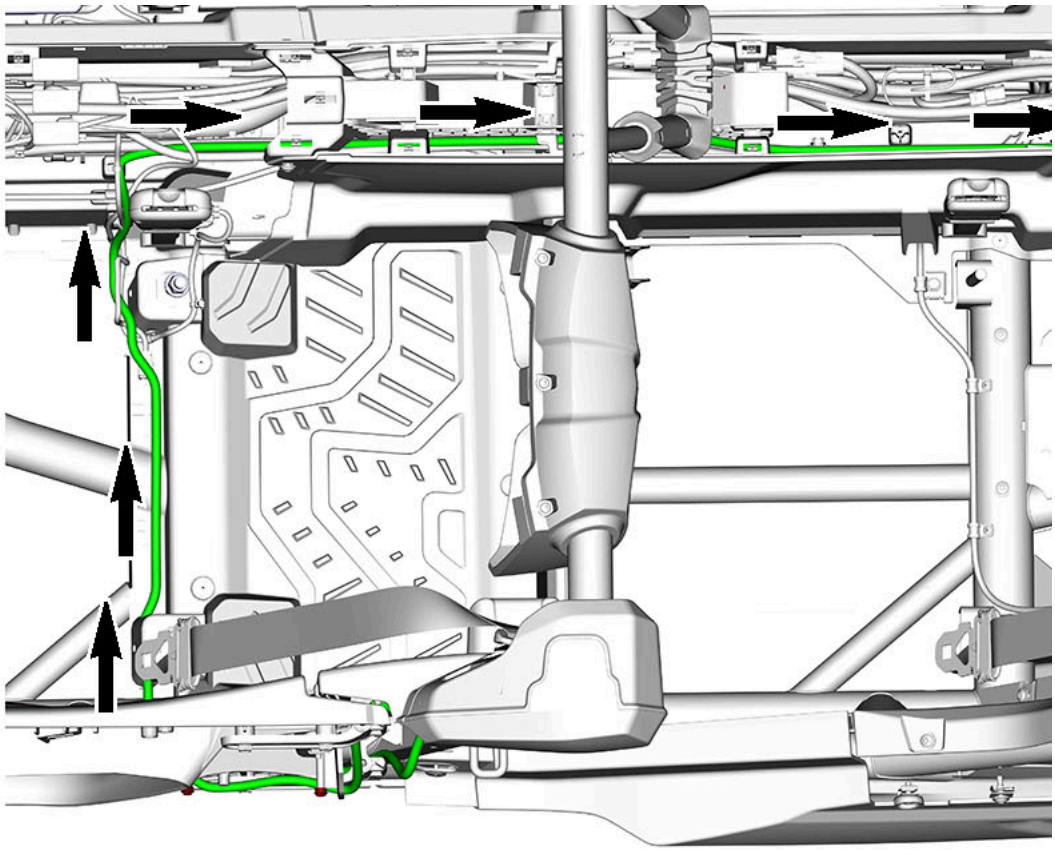

SOME COMPONENTS REMOVED FOR CLARITY

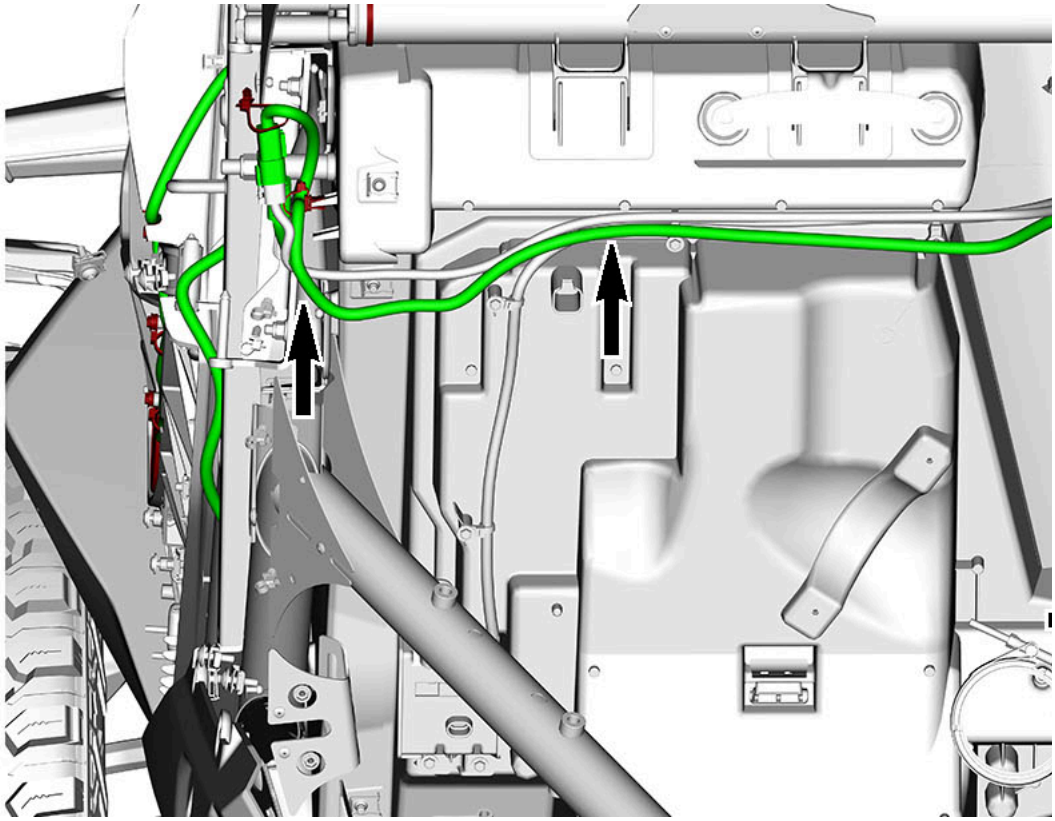

Note

Make sure to properly route and secure the rear section of the harness so it does not hang loose inside the body panels causing premature wear.

6. Make the connections between the harness coming from the LH and RH door speaker harnesses [P3] and [P4] to the one coming from the LH and RH rear speaker harnesses [P5] and [P6] and the main harness [P16] which connects to the doors speaker harnesses female connectors.

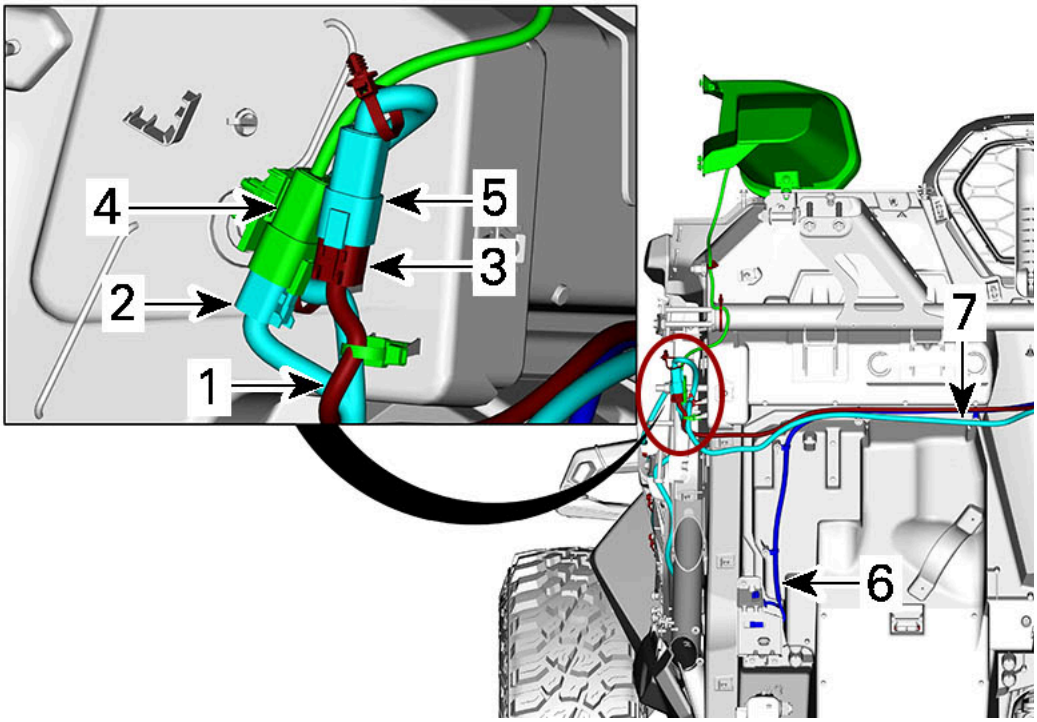

1. Main harness [P16] (RED)
2. Male connector from LH speaker door to LH rear speaker harness
3. Male connector from main harness [P16] to LH speaker door harness
4. Female connector from rear speaker harness (LIME GREEN)
5. Female connector from LH speaker door harness to main harness [P16] male connector
6. Vehicle main electrical system (DARK BLEU)
7. LH speaker door harness (CYAN BLUE)
8. RH speaker door harness (CYAN BLUE)

FRONT SPEAKER INSTALLATION

ALL MODELS

Note
If vehicle is equipped with *Front Intrusion Bar* (P/N 715007312), front speakers must be installed before *Intrusion Bar*.



1. Install the grommet [P11a] on the driver's side dash mount.

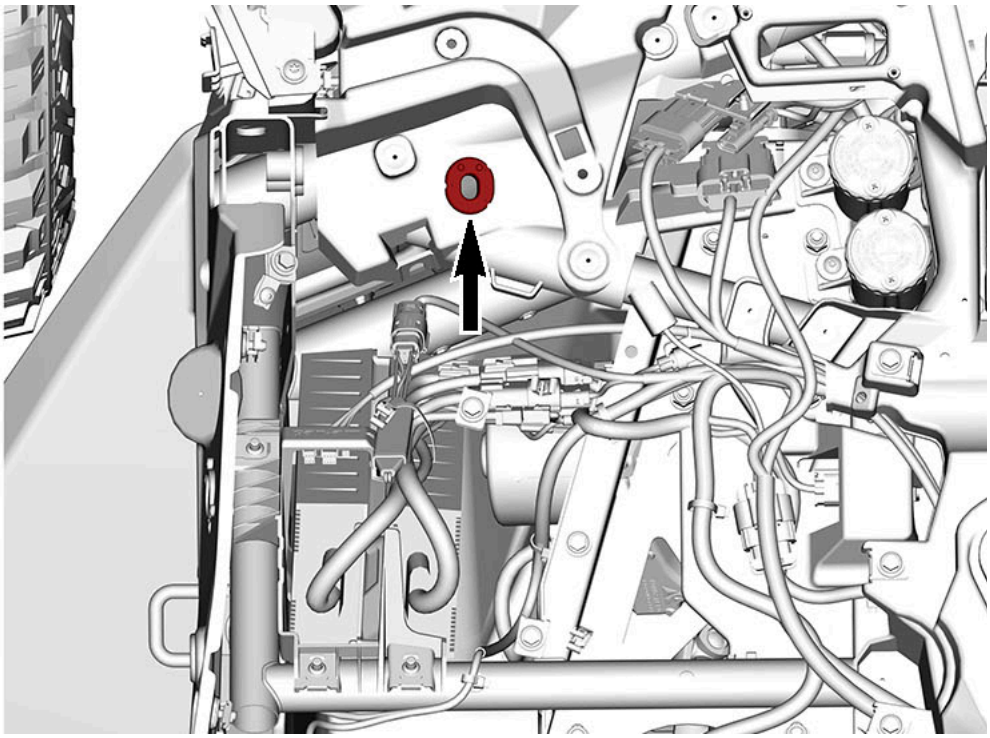

2. Install clips [P11b] on front speakers.

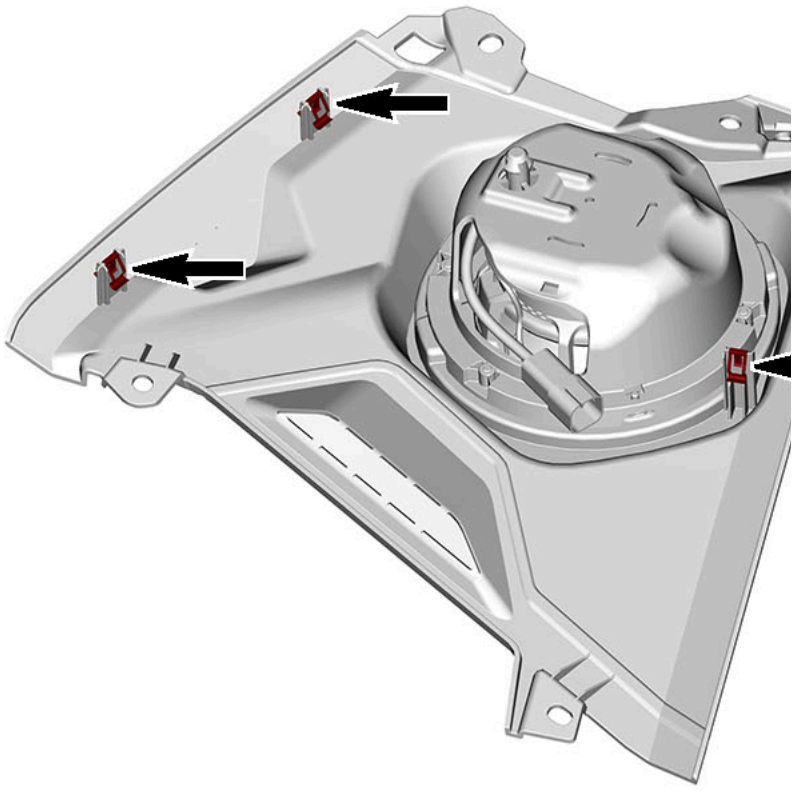

3. Connect the front speaker harness into the primary harness [P16] connector then install the left front speaker, centered on the grommet, in place of the left front dash panel (which was removed in step 5). Secure using four (4) M6 X 20 hex. flanged screws [P11c], one M5 X 14 Torx truss nylock screw [P11d] and the previously kept M6 stainless washer.

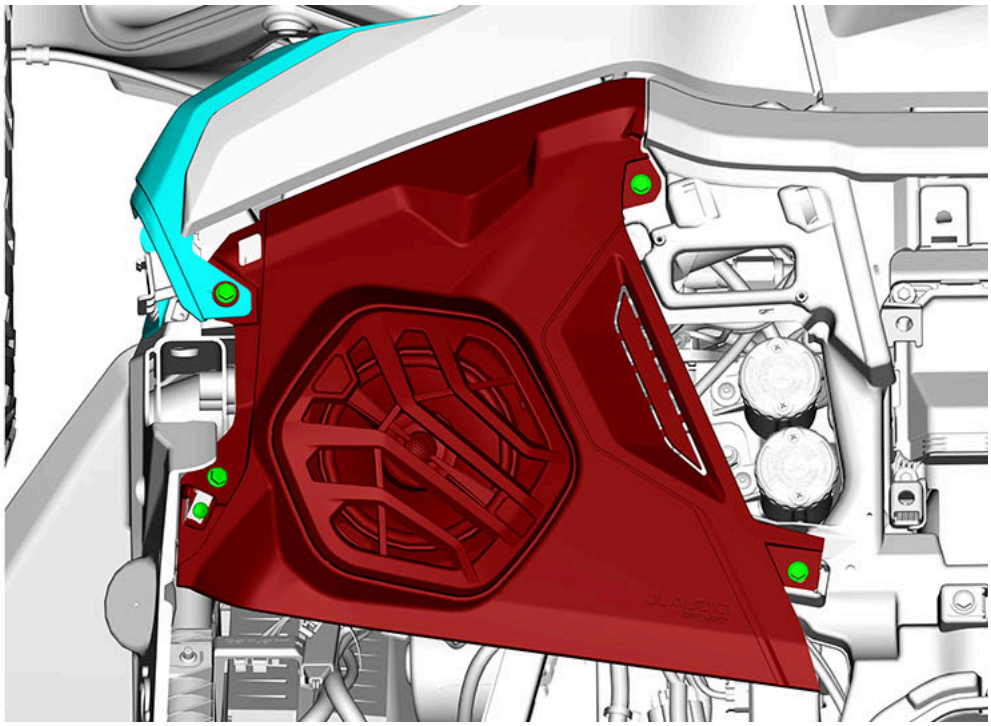

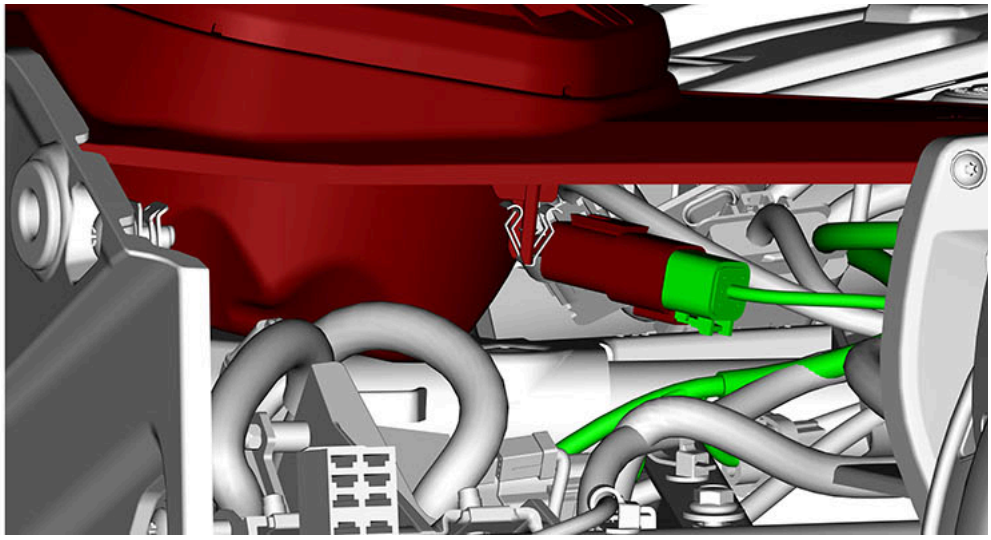

4. Connect the main harness to the positive (+) and negative (-) battery posts. Tighten nuts to specification.

TIGHTENING TORQUE	
Battery Connection Nut	4.5 ± 0.5 N•m (40 ± 4 lbf•in)

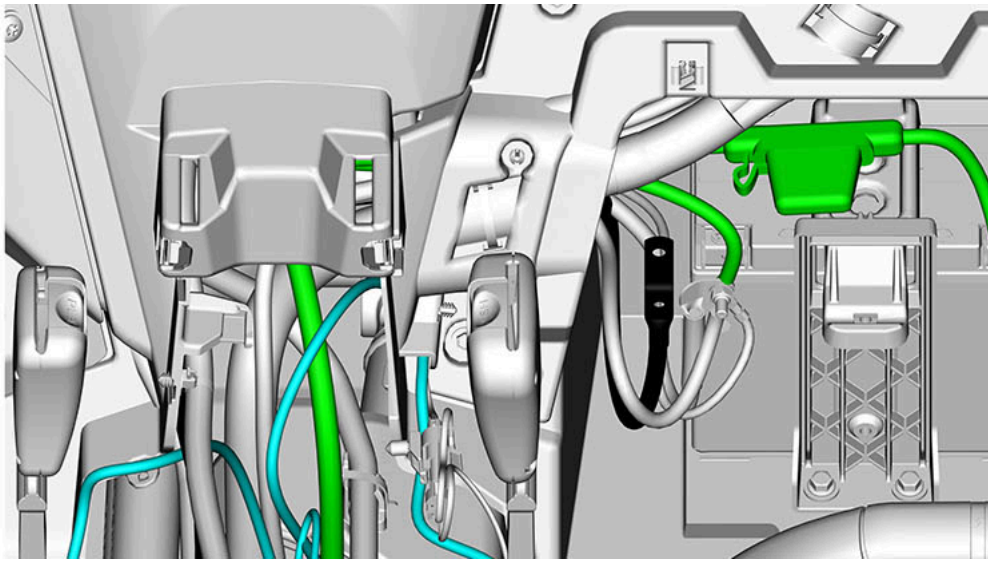

5. Reinstall the needed previously removed parts.

6. Reconnect the battery and reinstall the previously removed battery cover.

NOTICE
Always connect RED cable (+) first, then BLACK cable (-) .

7. Install the previously removed driver and passenger seats.

8. Once all the components are installed, select the calibration according to your equipment.

⚠ CAUTION
Prolonged exposure to loud music can damage your hearing. Therefore, we suggest a 10 minutes break time every 45 minutes of listening.

⚠ CAUTION
Do not manipulate the audio controller while operating the vehicle. operate your audio system in a manner that still allows you to hear necessary surrounding noises to operate your vehicle safely.

NOTICE
Extended use of electrical accessories without engine running will drain battery.

NOTICE
Do not use pressure washer. Although the unit is sealed against most water or dirt intrusion, excessive pressure washing or complete submersion in water or snow is beyond the unit's design limits and the electronic components can be damaged. This damage will not be covered under any warranty.

SYSTEM CALIBRATION

WITH *10.25" COLOR DISPLAY*

1. In the *Preferences* menu, select *Audio Configuration*.

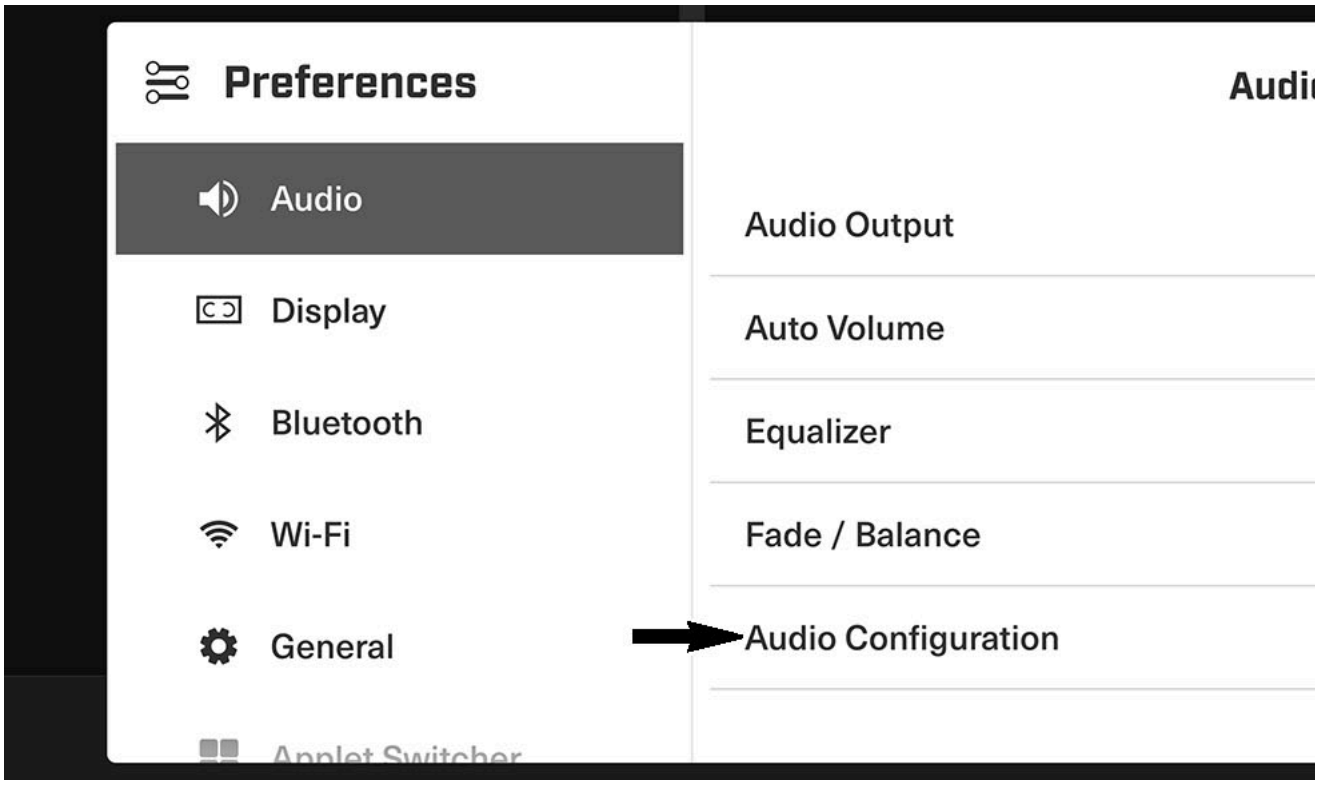

2. Select the proper calibration for your audio configuration.

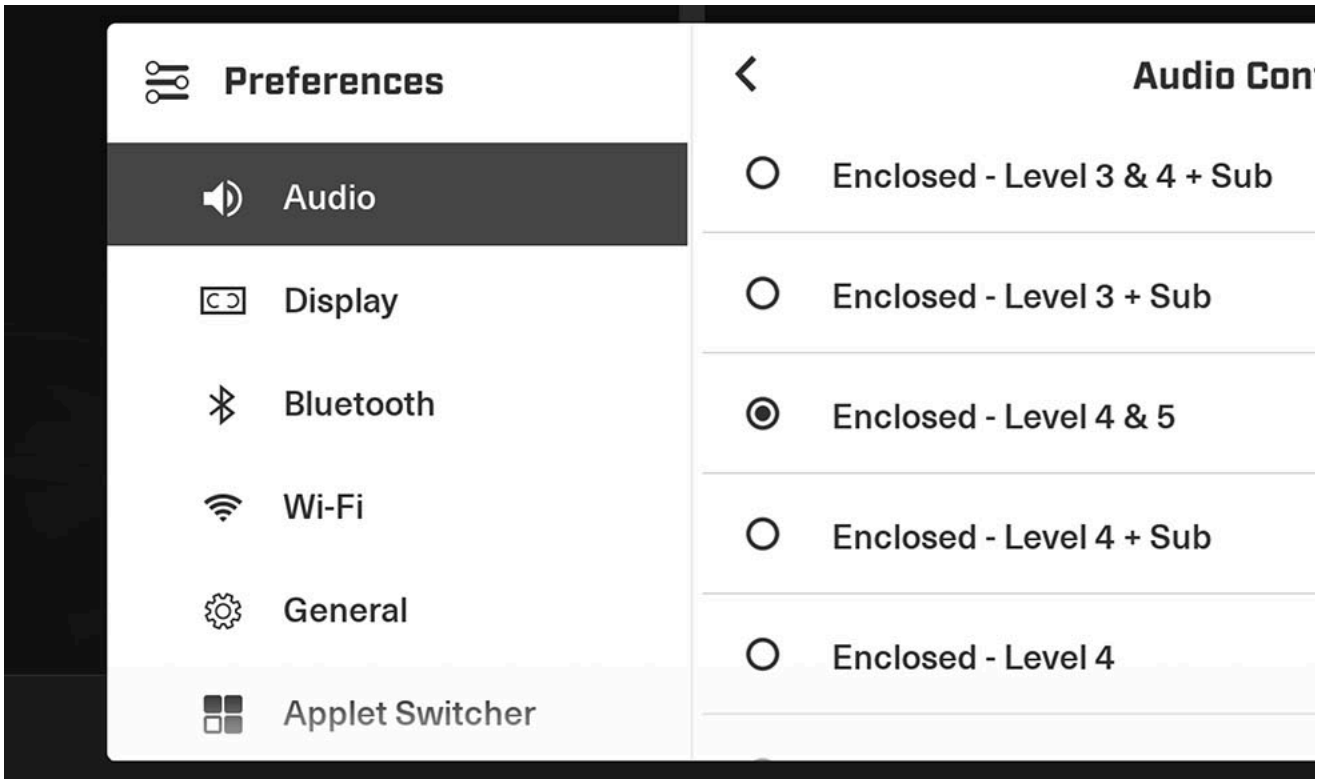

3. In the *Preferences* menu, select *Audio Output*.

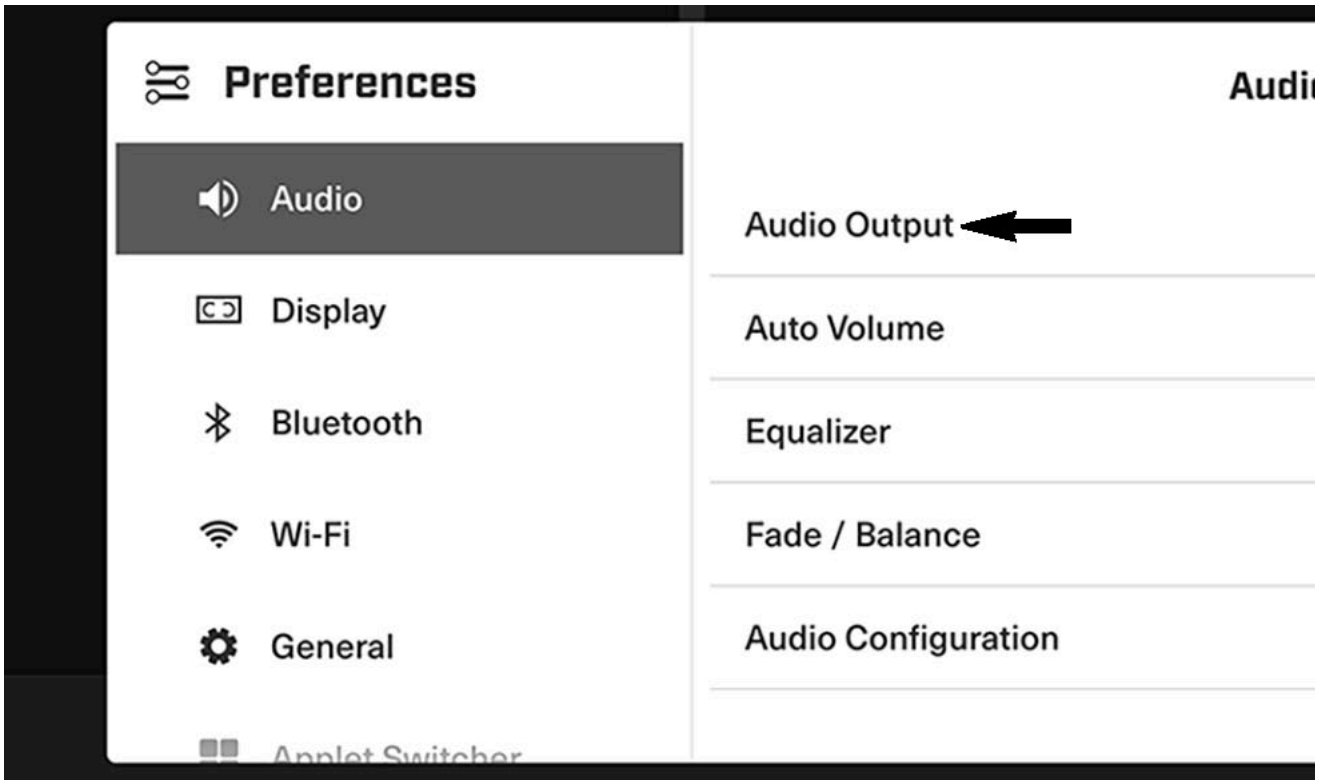

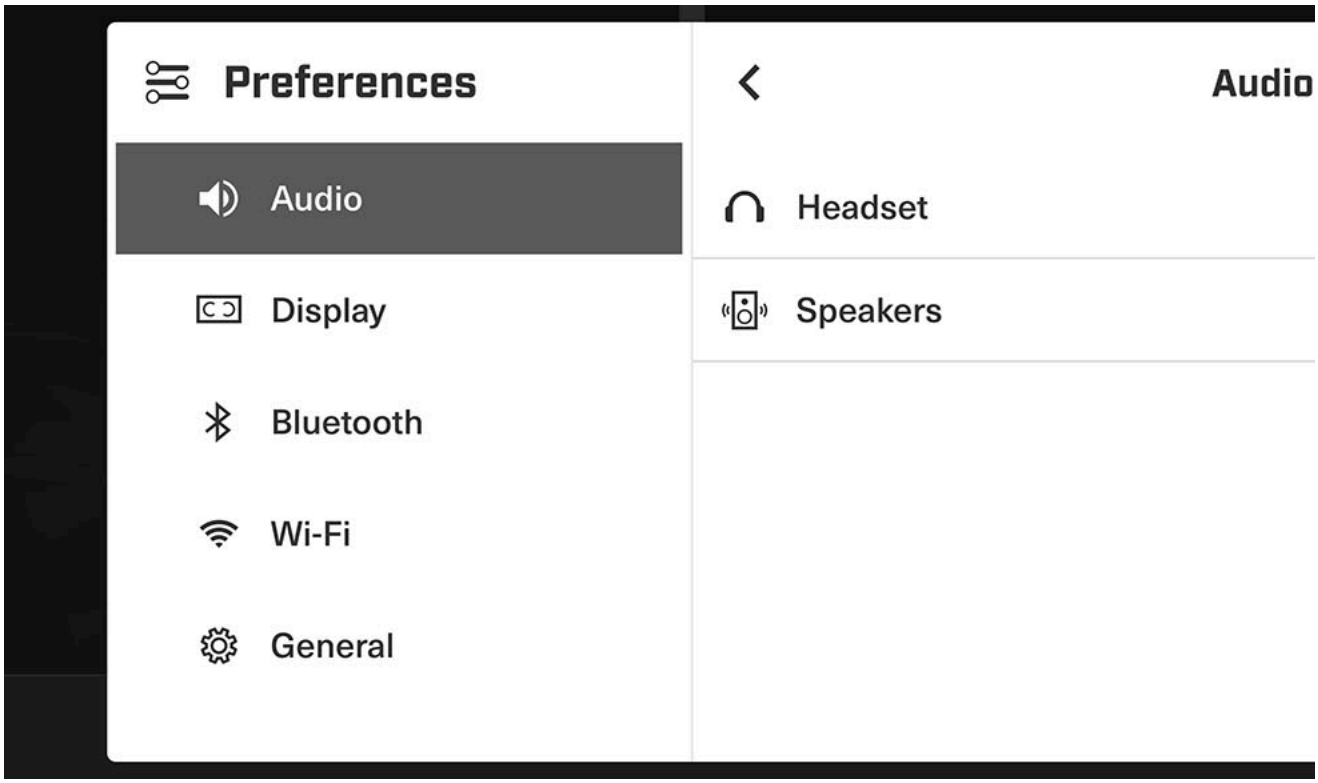

4. In the *Audio Preferences Menu,* select *Equalizer*.

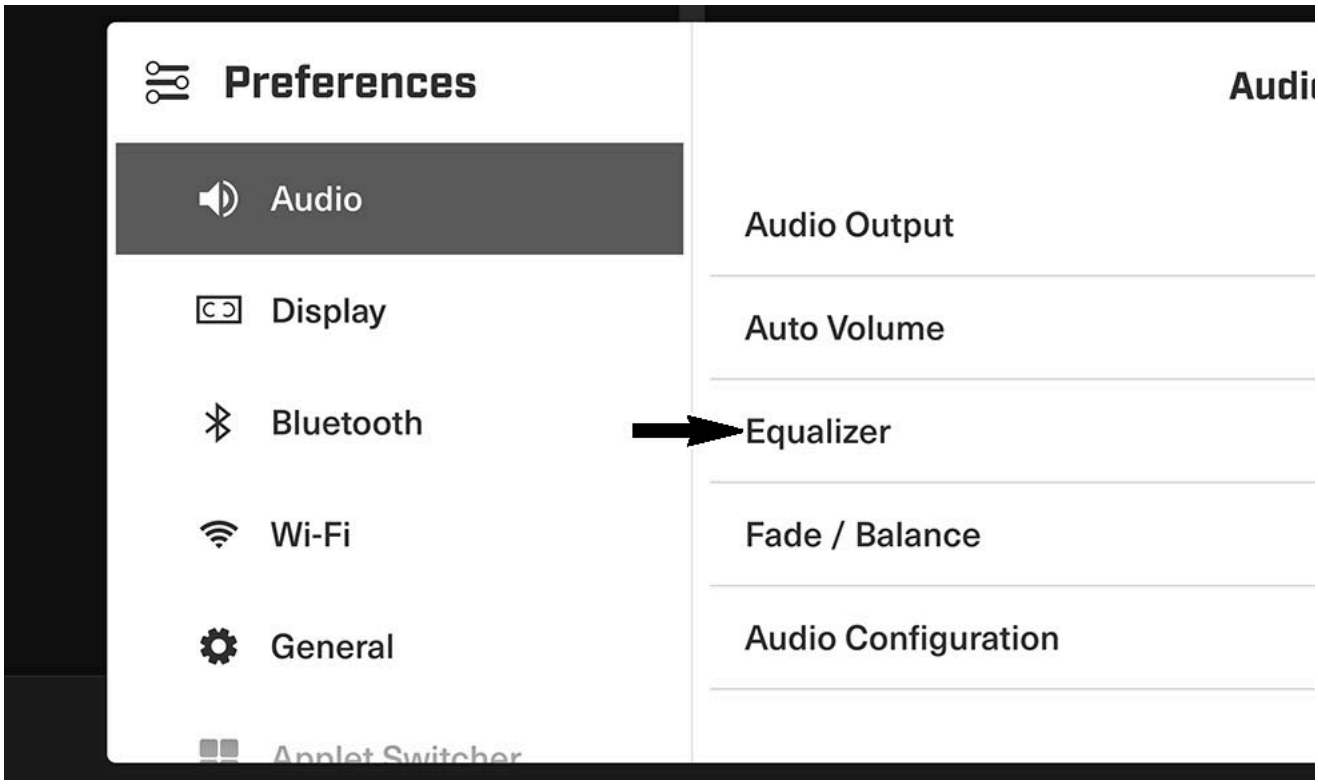

5. It is possible to adjust three types of audio frequencies: treble, midrange and bass.

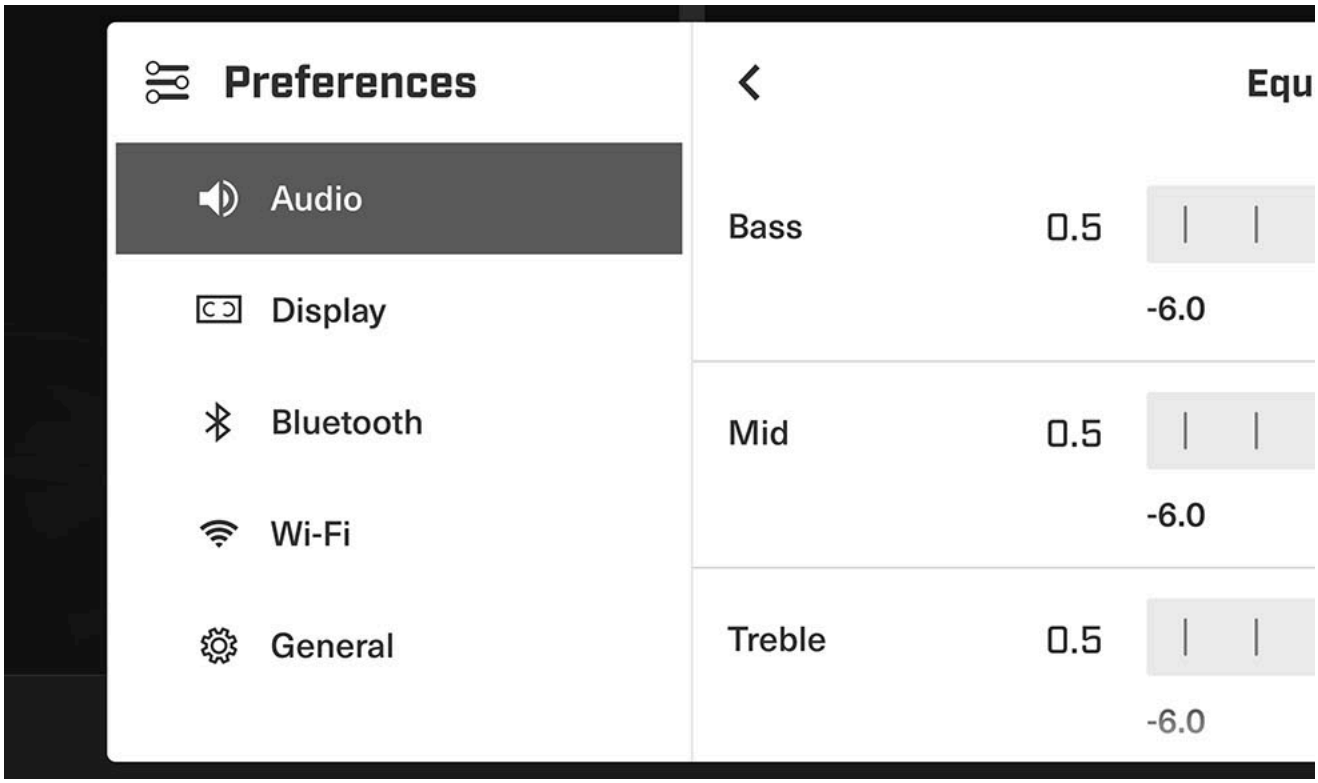

6. For better audio quality, we recommend enabling volume normalization in your music app settings to avoid sound distortion.

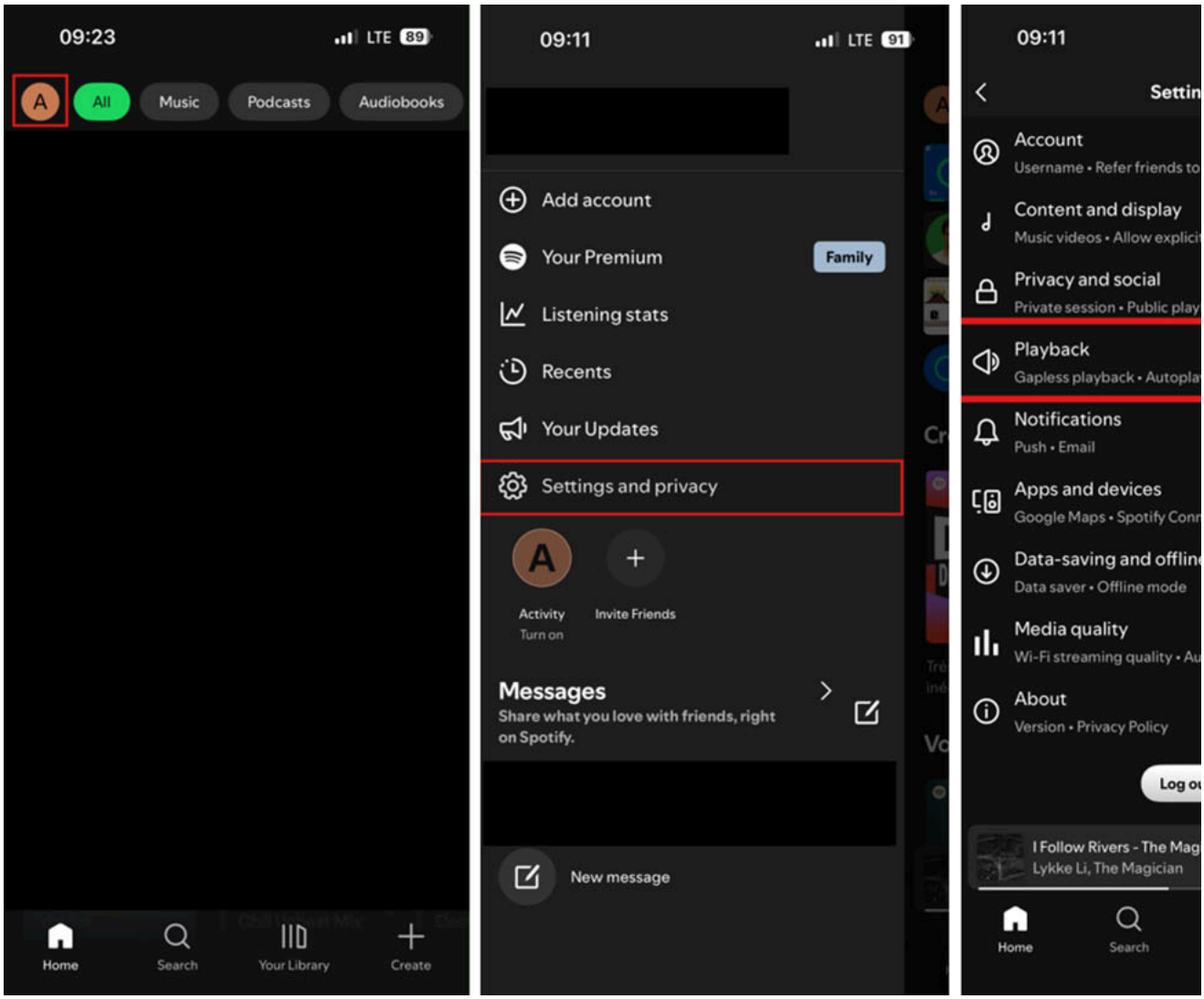

WITH *JL AUDIO MM50 CONTROLLER*

1. Select the FM Source
2. Short *Play/Pause* button followed by a long press of the *Day/Night* button.



TROUBLESHOOTING

PROBLEM	CONDITION	PROBABLE CAUSE	CURE
LED not illuminating	At least one other LED working	Bad LED or connection	Remove speaker and check connection to LED.
			Replace speaker (P/N 710009522).
	No LED working & RGB control module light is off (see pic. #3)	Bad RGB LED Controller	Replace RGB LED Controller (P/N 710007982) (see pic. #3).
		LED controller fuse blown	Change fuse (see pic. #1).
		Harness malfunction	Replace harness (refer to service tab).
No Audio will play	Amplifier Power light is on (see pic. #5)	Cable not connected properly	Remove dash pannel (refer to instruction sheet). Make sure all cables are fully seated (see pic. #7). Place a wrapping of duct tape around them to secure them.
		Wrong audio output selected in touch screen	Select the proper audio output in the menu (refer to instruction sheet).
	Amplifier Power light is off (see pic. #5) & 0V DC at main connector (see pic. #6)	Amplifier main harness not fully connected	Verify if main harness is properly connected to power source (see instruction sheet).
		Main fuse is blown	Verify the fuse (see pic. #2).
		Main harness malfunction	Replace harness (refer to service tab).
	Amplifier Power light is off (see pic. #5) & 12V DC at main connector (see pic. #6)	Bad power connection	Verify that the power connector is fully seated (they could be hard to push) (see pic. #7).
		12V at "turn on signal" (see pic. #7)	Make sure "turn on" connection is properly seated (bullet connector - see pic. #7).
			Replace the amplifier (refer to service parts table).
		0V at "turn on signal" (see pic. #7)	Verify audio output with 10.25 screen (refer to instruction

PROBLEM	CONDITION	PROBABLE CAUSE	CURE
			sheet).
	Protect light is staying on (see pic. #5)	Speaker or speaker harness short	Unplug each speaker individually to find the defective one (see pic. #4, light should turn off when defective speaker is unpluged) - replace defective speaker (P/N with LED 710009522, P/N without LED 710009523). If no speaker is defective - replace harness (refer to service tab).
		Input signal is shorted	Verify input signal harness.
		Amplifier malfunction	Replace the amplifier (refer to service parts table).
Subwoofer will not play	See No Audio will play section	-	-
Volume knob malfunctioning (if equiped with head unit)	Will go only one way, thus keeping sound at max level	Bad Head Unit	Replace Head Unit (refer to instruction sheet, (P/N 710009173)).
Bluetooth audio will not connect	Bluetooth is discoverable and enabled on cellphone. User tried removing device and searching for it again.	Bad Head Unit (if equipped with head unit)	Replace Head Unit (refer to instruction sheet (P/N 7100009173)).
		Hub malfunction (if equipped with 10.25" Display)	See Service Manual
Speakers malfunctioning	Intermittently working good or at least one speaker working	Cable not connected properly	Make sure the cables are fully seated (see pic. #4). Place a wrapping of duct tape around them to secure them.
	Does not work, even if the vehicle is moving or if the sound is turned up or down	Speaker defective	Replace defective speaker (P/N with LED 710009522) (P/N without LED 710009523).
Subwoofer low bass / output	System otherwise fully functionnal	Wrong audio set up	Change audio set up (see instruction sheet).
All potential issue with Hub controls (volume, bluetooth, etc.)	-	-	See Service Manual

Picture	Description	
1	Amplifier Fuse	

Picture	Description	
2	Main Power Fuse	
3	RGB LED Controller	
4	Speaker Connector	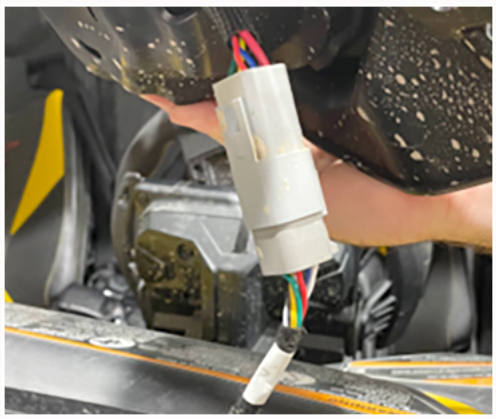
5	MX500/4 Audio Amplifier	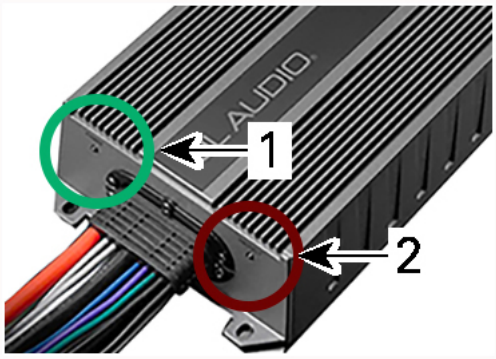 1. GREEN = Power light 2. RED = Protection mode light

Picture	Description	
6	Main Connector	
7	Turn ON Signal	