SSV KIT - 4-Point Retractable Harness

Product:	**Side-by-side**
Project no:	**487802774**
Instruction Sheet P/N:	**487802774**
Revision no:	
Revision date:	
Item covered:	**4–Point Retractable Harness**

The following symbols may be used in this document:

WARNING

Indicates a hazardous situation which, if not avoided, could result in death or serious injury.

CAUTION: Indicates a hazard situation which, if not avoided, could result in minor or moderate injury.

NOTICE **Indicates an instruction which, if not followed, could severely damage vehicle components or other property.**

WARNING

- This kit is designed for specific applicable models only (authorized BRP dealers will confirm model(s)). It is not recommended for units other than the one (those) for which it was sold.
- If the installation of the kit requires a template, ensure template is to scale.
- Should removal of a locking device (e.g. lock tabs, self-locking fasteners, etc.) be required when undergoing disassembly/ assembly, always replace with a new one.
- Torque wrench tightening specifications must strictly be adhered to.

WARNING

Some important safety information and/or operating instructions dedicated to the end user might be included in this instruction sheet. Make sure to give the kit part number as well as the instruction sheet included with this kit to the customer. Verify that the customer has access to all the information required for proper use of the accessory.

NOTE: USE TIGHTENING TORQUES IN THE FOLLOWING TABLE IF NOT OTHERWISE SPECIFIED.

	GRADE			
	5.8	8.8	10.9	12.9

M4	1.8 ± 0.2 N•m (16 ± 2 lbf•in)	2.8 ± 0.2 N•m (25 ± 2 lbf•in)	3.8 ± 0.2 N•m (34 ± 2 lbf•in)	4.5 ± 0.5 N•m (40 ± 4 lbf•in)
M5	3.3 ± 0.2 N•m (29 ± 2 lbf•in)	5 ± 0.5 N•m (44 ± 4 lbf•in)	7.8 ± 0.7 N•m (69 ± 6 lbf•in)	9 ± 1 N•m (80 ± 9 lbf•in)
M6	7.5 ± 1 N•m (66 ± 9 lbf•in)	10 ± 2 N•m (89 ± 18 lbf•in)	12.8 ± 2.2 N•m (113 ± 19 lbf•in)	16 ± 2 N•m (142 ± 18 lbf•in)
M8	15.3 ± 1.7 N•m (135 ± 15 lbf•in)	24.5 ± 3.5 N•m (18 ± 3 lbf•ft)	31.5 ± 3.5 N•m (23 ± 3 lbf•ft)	40 ± 5 N•m (30 ± 4 lbf•ft)
M10	29 ± 3 N•m (21 ± 2 lbf•ft)	48 ± 6 N•m (35 ± 4 lbf•ft)	61 ± 9 N•m (45 ± 7 lbf•ft)	73 ± 7 N•m (54 ± 5 lbf•ft)
M12	52 ± 6 N•m (38 ± 4 lbf•ft)	85 ± 10 N•m (63 ± 7 lbf•ft)	105 ± 15 N•m (77 ± 11 lbf•ft)	128 ± 17 N•m (94 ± 13 lbf•ft)
M14	85 ± 10 N•m (63 ± 7 lbf•ft)	135 ± 15 N•m (100 ± 11 lbf•ft)	170 ± 20 N•m (125 ± 15 lbf•ft)	200 ± 25 N•m (148 ± 18 lbf•ft)
M16	126 ± 14 N•m (93 ± 10 lbf•ft)	205 ± 25 N•m (151 ± 18 lbf•ft)	255 ± 30 N•m (188 ± 22 lbf•ft)	305 ± 35 N•m (225 ± 26 lbf•ft)
M18	170 ± 20 N•m (125 ± 15 lbf•ft)	273 ± 32 N•m (201 ± 24 lbf•ft)	330 ± 25 N•m (243 ± 18 lbf•ft)	413 ± 47 N•m (305 ± 35 lbf•ft)

The illustrations in this document show typical construction of the different assemblies and may not reproduce the full detail or exact shape of the parts; however, they represent parts that have the same or similar function.

Installation time is approximately 0.6 hour per harness.

GENERAL INFORMATIONS

This vehicle is equipped with seat belts to help protect the driver and passenger in the event of a collision, rollover, or tip-over. The seat belts can help keep occupants stay in the passenger compartment.

> ⚠ **WARNING**
>
> Wear seat belts properly at all times. Make sure it remains securely fastened and tightened against the body. Seat belts reduce the risk of injury in a crash and help keep limbs inside the cockpit in a rollover or any accidents.

If driver's seat belt is not fastened when:

- The start button is pressed, the seat belt indicator lamp will flash.
- The engine is started and shift lever is moved out of PARK, vehicle speed will be limited to a maximum of approximately 20 km/h (12 MPH) on flat ground.

> ⚠ **WARNING**

The vehicle may reach higher or lower speed depending on inclines.

To remind you to fasten the seat belt, the multifunction gauge will display the following message: ENGINE LIMITATION ENGAGED FASTEN SEAT BELT.

WARNING

There is no indicator light or message for the passenger seat belts. The driver is responsible for the safety of the passenger and should ensure that the passenger buckles the seat belt.

4-POINT SEAT BELTS

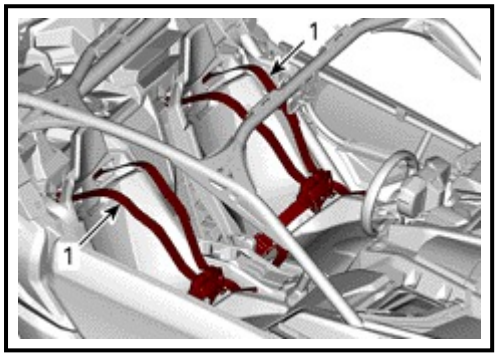

TYPICAL - PARTS REMOVED FOR CLARITY
1. Seat belts

WARNING

Wear seat belt properly. Make sure it remains securely fastened and tightened against the body. Make sure it is not twisted or defective.

To fasten the seat belt, insert the latch plate into the buckle, then pull the belt to ensure it is properly fastened.

ON BOTH SIDES, adjust the seat belt tightly against your body by pulling the excess of the lap belt towards the inside. The buckle must be centered at the waistline (as low as possible).

To loosen the seat belt, hold the lap belt with one hand and pull the red strap outwards.

To detach the seat belt, push on the red button on the buckle.

PARTS TO BE INSTALLED

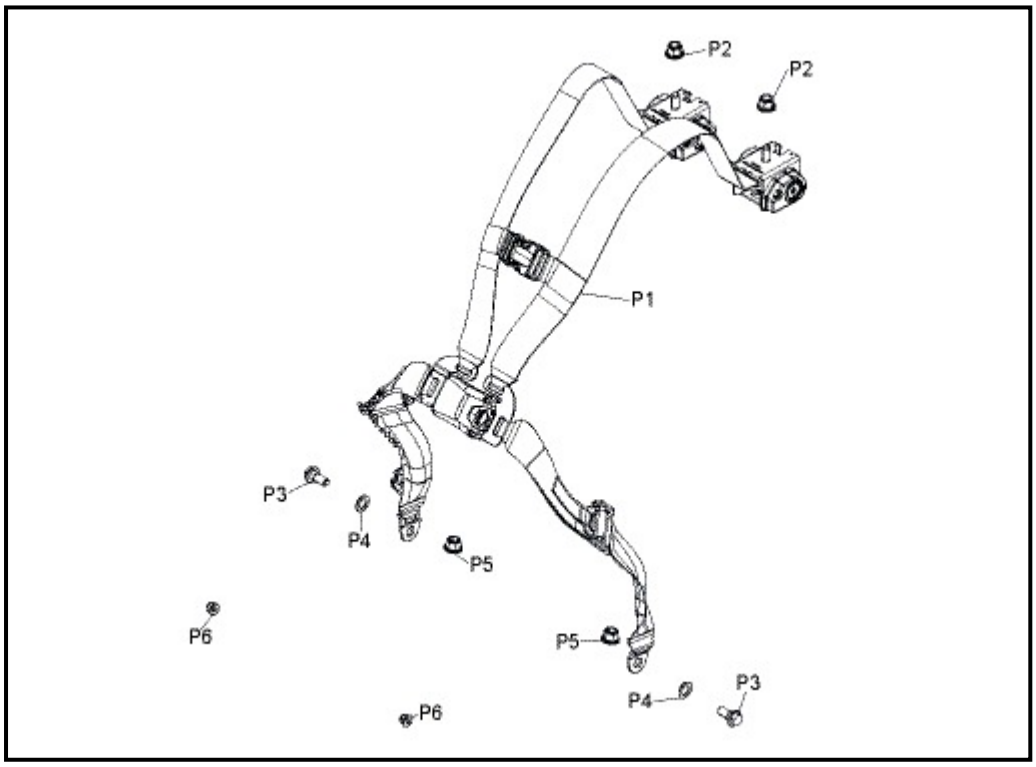

ITEM	DESCRIPTION	Part number	QTY
---	4-Point Harness Driver	715005021	1

P1	4-Point Safety Belt	708002387	1
P2	Elastic Flange Nut M12	233221416	2
P3	Safety Belt Screw	708002504	2
P4	Position Washer	708000891	2
P5	Elastic Flange Nut M12	233221416	2
P6	Elastic Flange Nut M8	233281464	2
---	4-Point Harness Passenger	715005022	1
P1	4-Point Safety Belt	708002388	1
P2	Elastic Flange Nut M12	233221416	2
P3	Safety Belt Screw	708002504	2
P4	Position Washer	708000891	2
P5	Elastic Flange Nut M12	233221416	2
P6	Elastic Flange Nut M8	233281464	2

VEHICLE PREPARATION

NOTE: Driver side shown, passenger side opposite. Same installation procedure on rear seat for MAX models.

Remove the driver side doors (see shop manual for instructions).

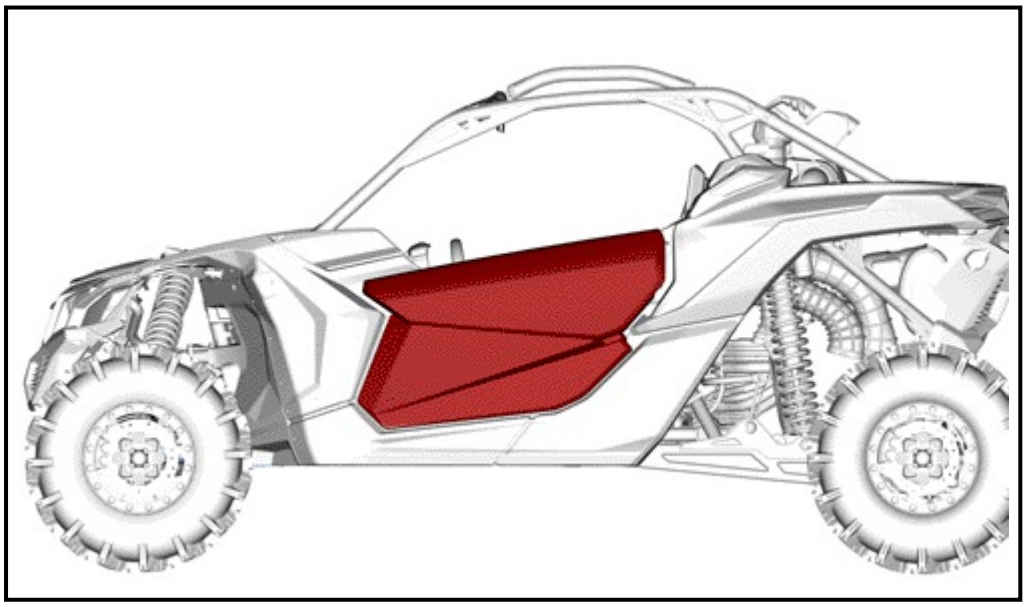

Remove seat (see shop manual for instructions).

Remove seat belt and disconnect the seat belt connector from vehicle harness (only disconnect the seat belt connector on driver side).

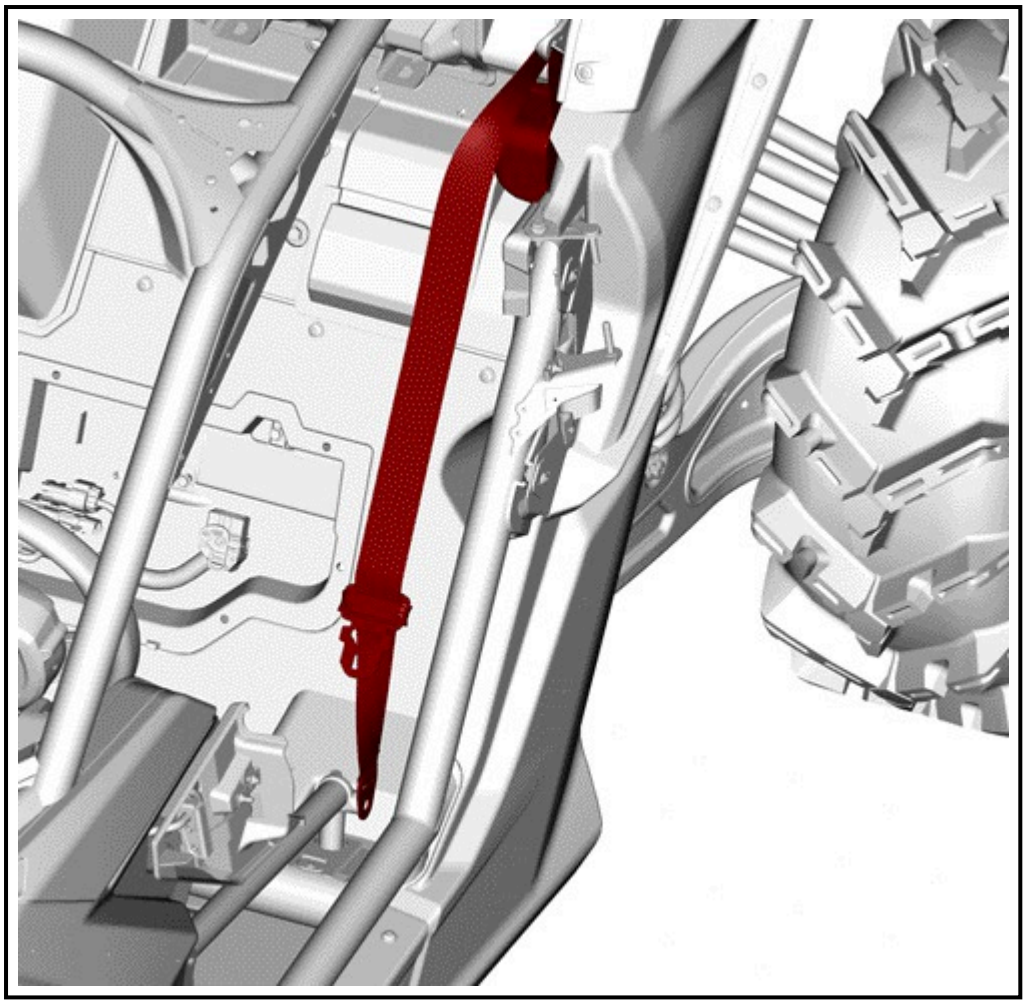

Remove console lateral panel (see shop manual for instructions).

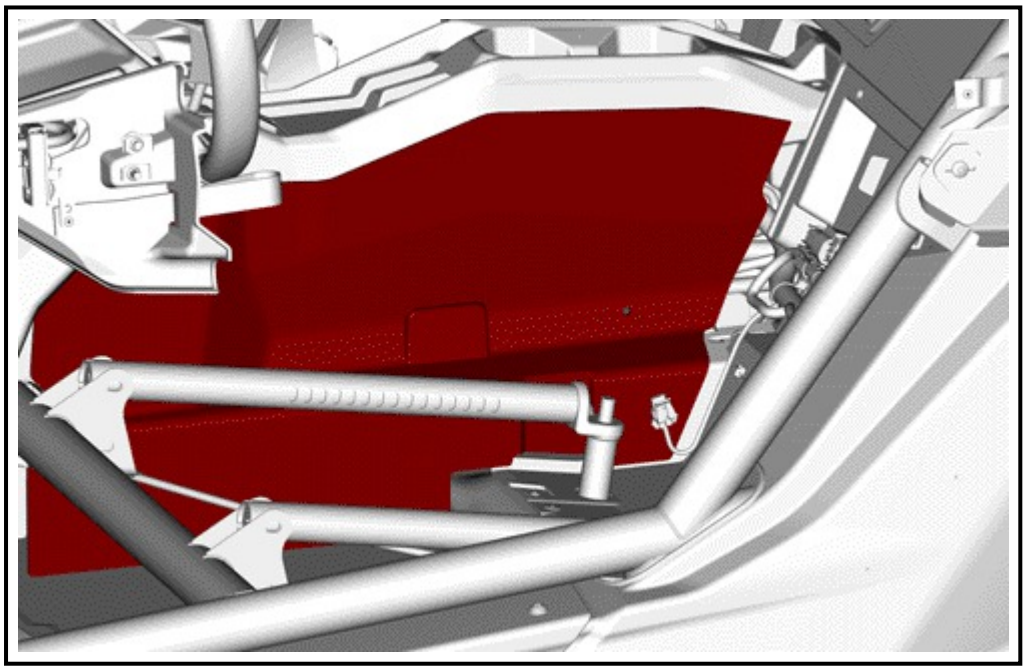

INSTALLATION

Install the lower left hand side of the 4-point safety belt [P1] with the position washer [P4] and the safety belt screw [P3].

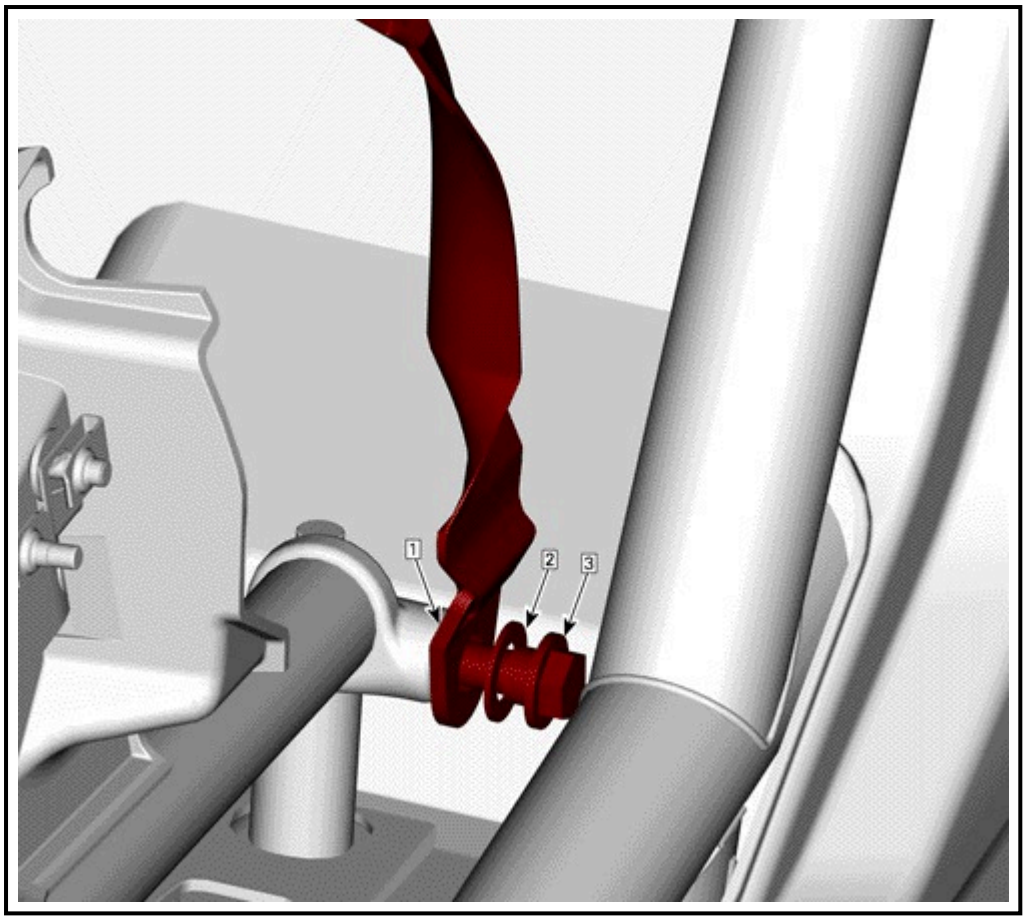

tightening torque	
Safety Belt Screw [P3]	64.5 ± 6.5 N•m (47.6 ± 4.8 lbf•ft)

Install the lower right hand side of the 4 points safety belt [P1] with the position washer [P4] and the safety belt screw [P3].

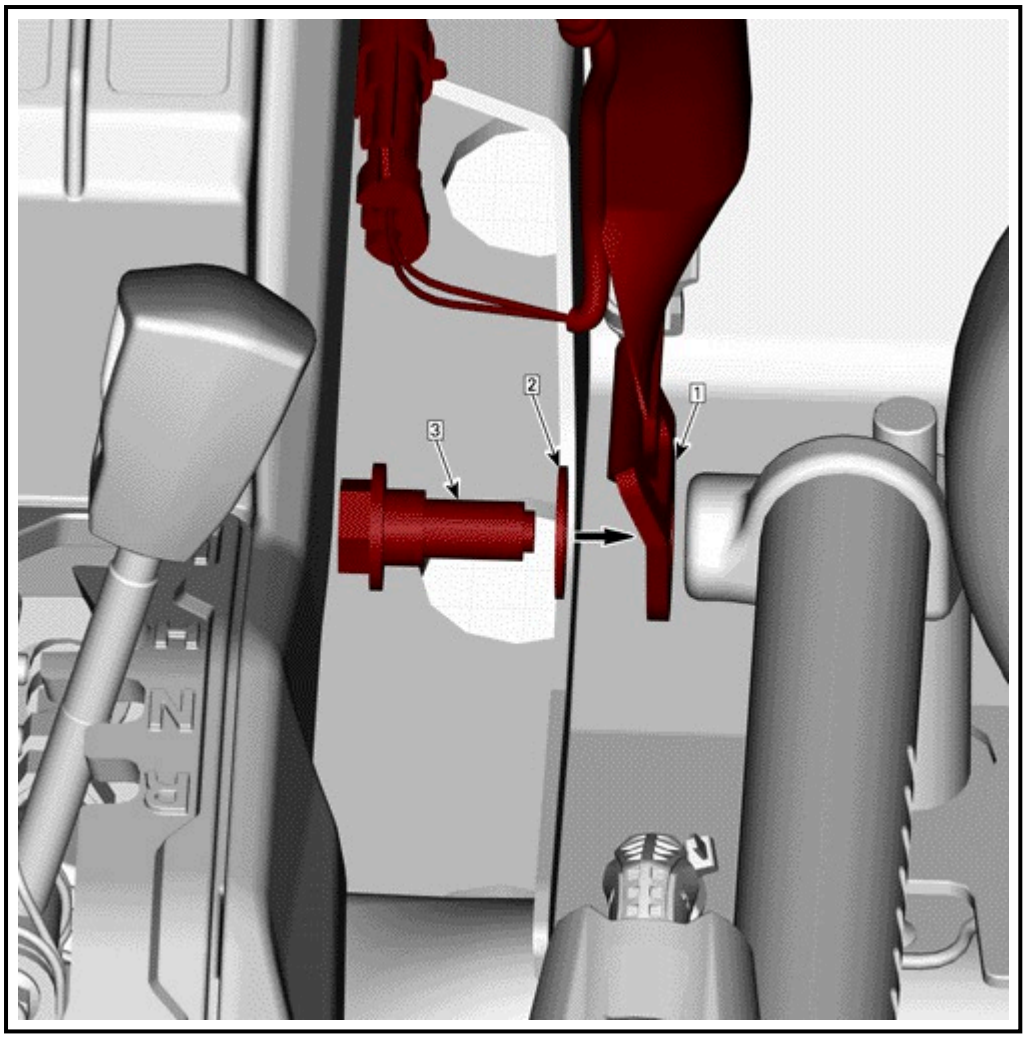

tightening torque	
Safety Belt Screw [P3]	64.5 ± 6.5 N•m (47.6 ± 4.8 lbf•ft)

Connect the seat belt connector to the vehicle harness.

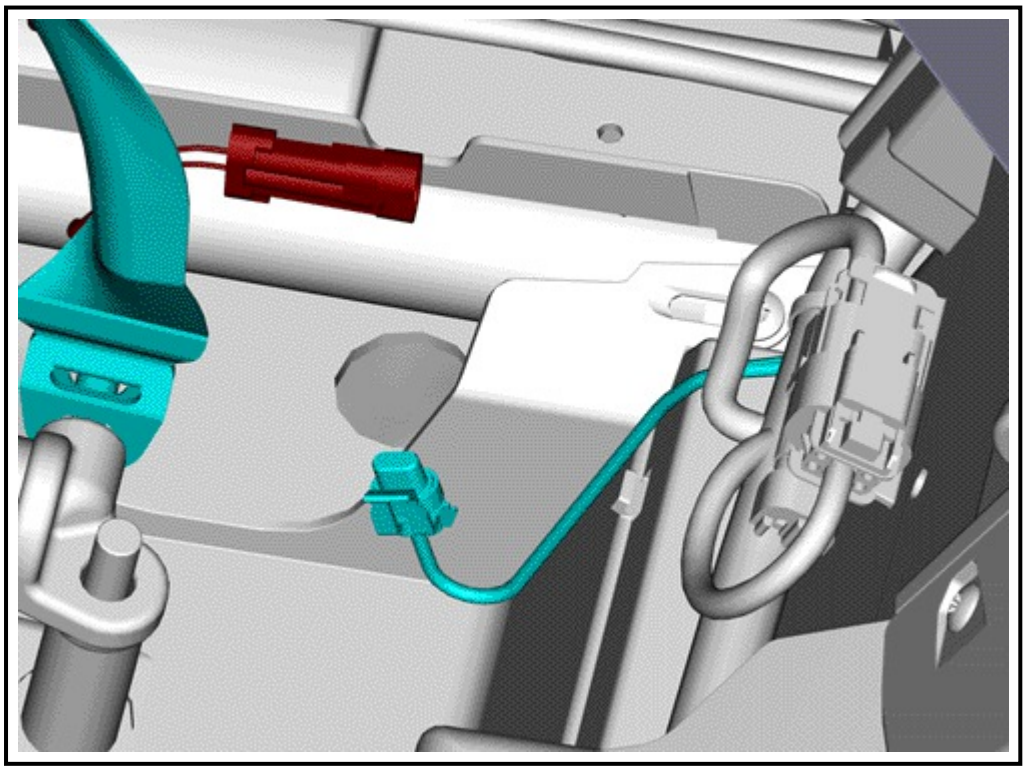

Install the upper part of the 4-point safety belt [P1].

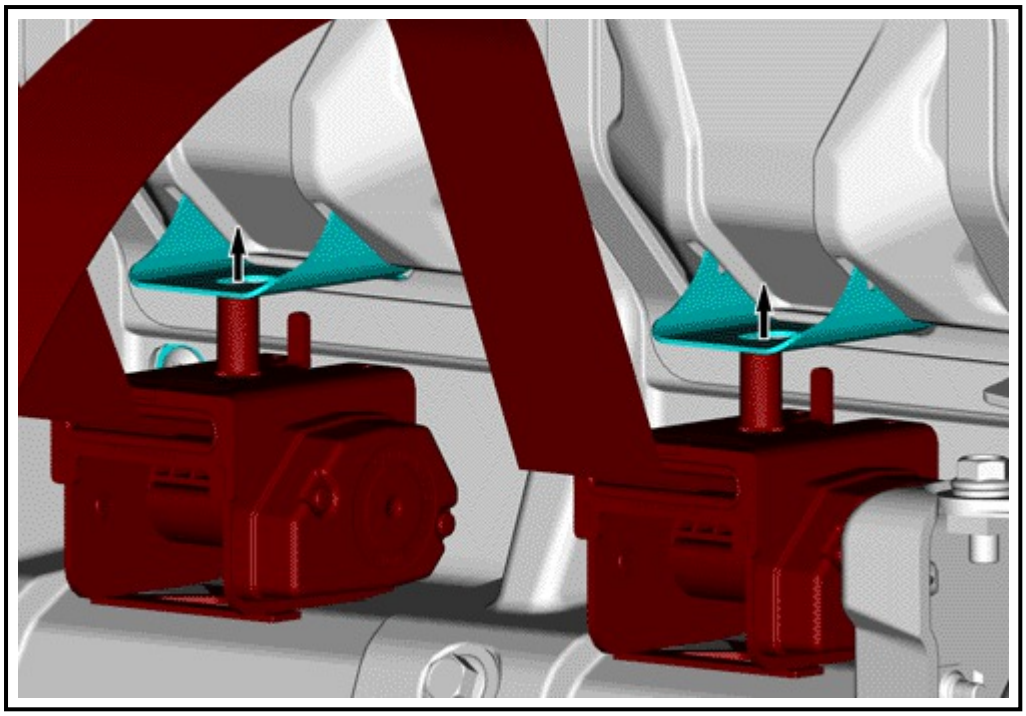

Secure the upper part of the 4-point safety belt [P1] with both elastic flange nut M12 [P2].

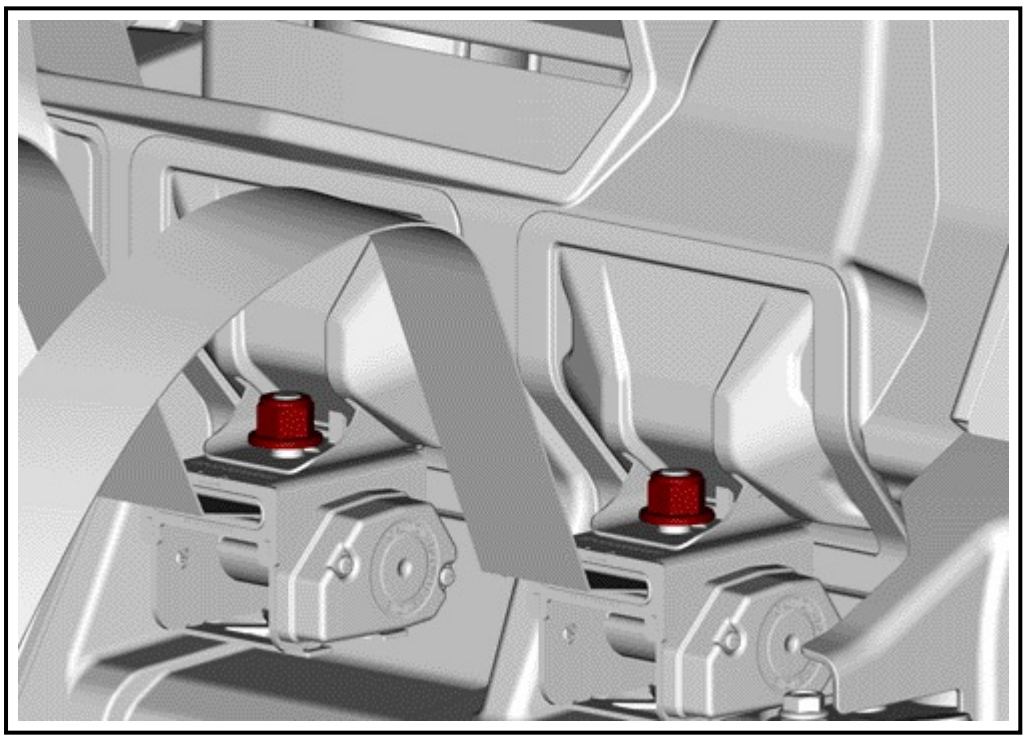

tightening torque	
Elastic Flange Nut M12 [P2]	105 ± 15 N•m (77.4 ± 11.1 lbf•ft)

Reinstall the console lateral panel.

Run the 4-point safety belt [P1] through the seat headrest.

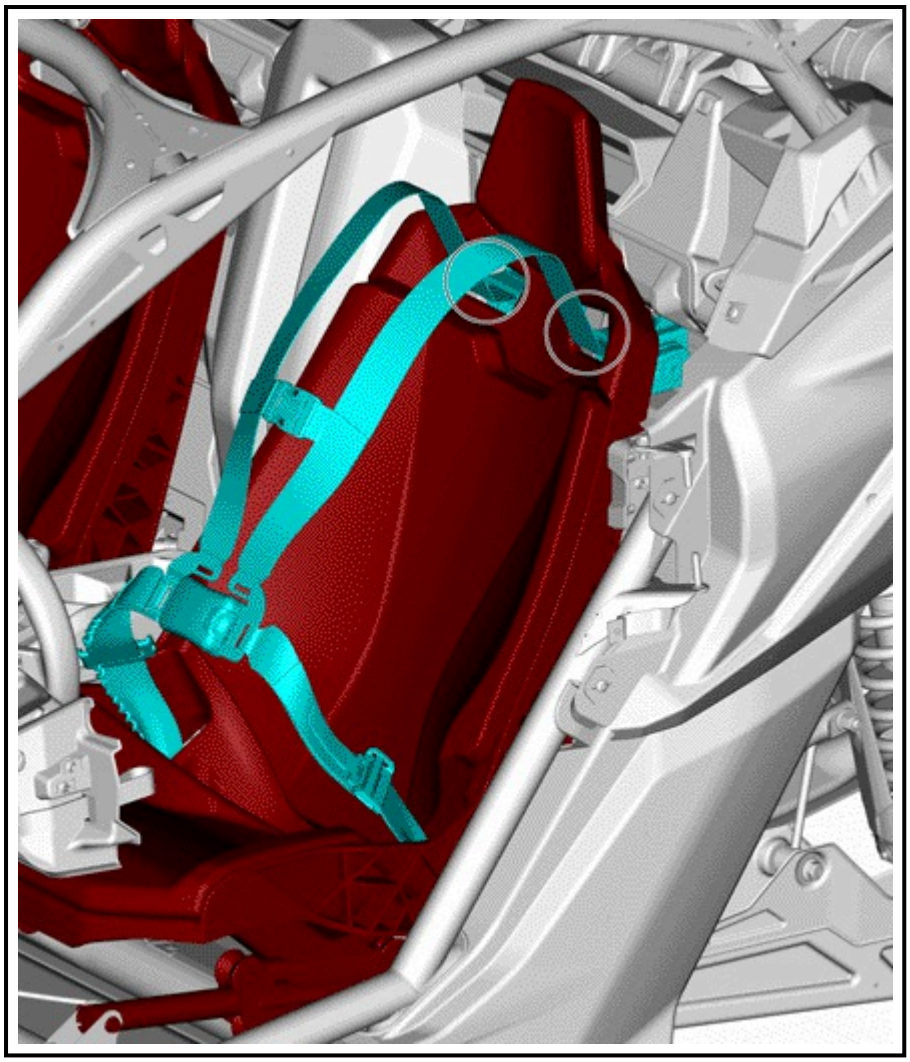

Reinstall seat with new elastic flange nuts M8 [P6] and elastic flange nuts M12 [P5].

tightening torque	
Elastic Flange Nut M8 [P6]	24.5 ± 3.5 N•m (18.1 ± 2.6 lbf•ft)
Elastic Flange Nut M12 [P5]	105 ± 15 N•m (77.4 ± 11.1 lbf•ft)

NOTICE **On MAX models, install cushion (P/N 707900653).**

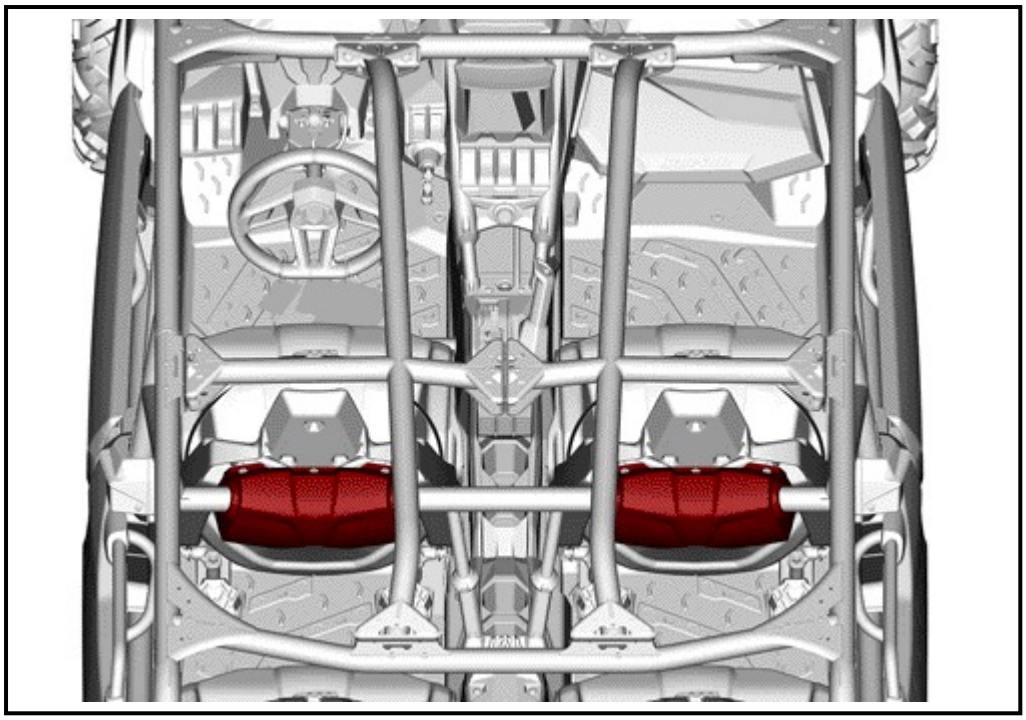

SEAT BELT CLEANING

To clean dirt and debris from the seat belts, sponge the straps with mild soap and water. Do not use bleach, dye, or household detergents.

WARNING

Do not use pressure washer to clean seat belt components. Use of pressure washer can permanently damage seat belt components.