SKI-DOO KIT - Glovebox Extension - GPS Support

Product:	**Ski-Doo**
Project no:	**487803599**
Instruction Sheet P/N:	**487803599**
Revision no:	
Revision date:	
Item covered:	**Glovebox Extension / GPS Support**

The following symbols may be used in this document:

WARNING

Indicates a hazardous situation which, if not avoided, could result in death or serious injury.

CAUTION: Indicates a hazard situation which, if not avoided, could result in minor or moderate injury.

NOTICE **Indicates an instruction which, if not followed, could severely damage vehicle components or other property.**

WARNING

- This kit is designed for specific applicable models only (authorized BRP dealers will confirm model(s)). It is not recommended for units other than the one (those) for which it was sold.
- Should removal of a locking device (e.g. lock tabs, self-locking fasteners, etc.) be required when undergoing disassembly/ assembly, always replace with a new one.
- Torque wrench tightening specifications must strictly be adhered to.
- Unless otherwise specified, engine must be OFF when performing any operation on the vehicle.
- Always be aware of parts that can move, such as wheels, transmission components, etc.

WARNING

Some important safety information and/or operating instructions dedicated to the end user might be included in this instruction sheet. Make sure to give the kit part number as well as the instruction sheet included with this kit to the customer. Verify that the customer has access to all the information required for proper use of the accessory.

NOTE: USE TIGHTENING TORQUES IN THE FOLLOWING TABLE IF NOT OTHERWISE SPECIFIED.

	GRADE			
	5.8	8.8	10.9	12.9

M4	1.8 ± 0.2 N•m (16 ± 2 lbf•**in**)	2.8 ± 0.2 N•m (25 ± 2 lbf•**in**)	3.8 ± 0.2 N•m (34 ± 2 lbf•**in**)	4.5 ± 0.5 N•m (40 ± 4 lbf•**in**)
M5	3.3 ± 0.2 N•m (29 ± 2 lbf•**in**)	5 ± 0.5 N•m (44 ± 4 lbf•**in**)	7.8 ± 0.7 N•m (69 ± 6 lbf•**in**)	9 ± 1 N•m (80 ± 9 lbf•**in**)
M6	7.5 ± 1 N•m (66 ± 9 lbf•**in**)	10 ± 2 N•m (89 ± 18 lbf•**in**)	12.8 ± 2.2 N•m (113 ± 19 lbf•**in**)	16 ± 2 N•m (142 ± 18 lbf•**in**)
M8	15.3 ± 1.7 N•m (135 ± 15 lbf•**in**)	24.5 ± 3.5 N•m (18 ± 3 lbf•ft)	31.5 ± 3.5 N•m (23 ± 3 lbf•ft)	40 ± 5 N•m (30 ± 4 lbf•ft)
M10	29 ± 3 N•m (21 ± 2 lbf•ft)	48 ± 6 N•m (35 ± 4 lbf•ft)	61 ± 9 N•m (45 ± 7 lbf•ft)	73 ± 7 N•m (54 ± 5 lbf•ft)
M12	52 ± 6 N•m (38 ± 4 lbf•ft)	85 ± 10 N•m (63 ± 7 lbf•ft)	105 ± 15 N•m (77 ± 11 lbf•ft)	128 ± 17 N•m (94 ± 13 lbf•ft)
M14	85 ± 10 N•m (63 ± 7 lbf•ft)	135 ± 15 N•m (100 ± 11 lbf•ft)	170 ± 20 N•m (125 ± 15 lbf•ft)	200 ± 25 N•m (148 ± 18 lbf•ft)
M16	126 ± 14 N•m (93 ± 10 lbf•ft)	205 ± 25 N•m (151 ± 18 lbf•ft)	255 ± 30 N•m (188 ± 22 lbf•ft)	305 ± 35 N•m (225 ± 26 lbf•ft)
M18	170 ± 20 N•m (125 ± 15 lbf•ft)	273 ± 32 N•m (201 ± 24 lbf•ft)	330 ± 25 N•m (243 ± 18 lbf•ft)	413 ± 47 N•m (305 ± 35 lbf•ft)

The illustrations in this document show typical construction of the different assemblies and may not reproduce the full detail or exact shape of the parts; however, they represent parts that have the same or similar function.

Installation time is approximately **0.25** hour.

ICON LEGEND

Icon	indicates
	Part to be discarded

PARTS TO BE INSTALLED

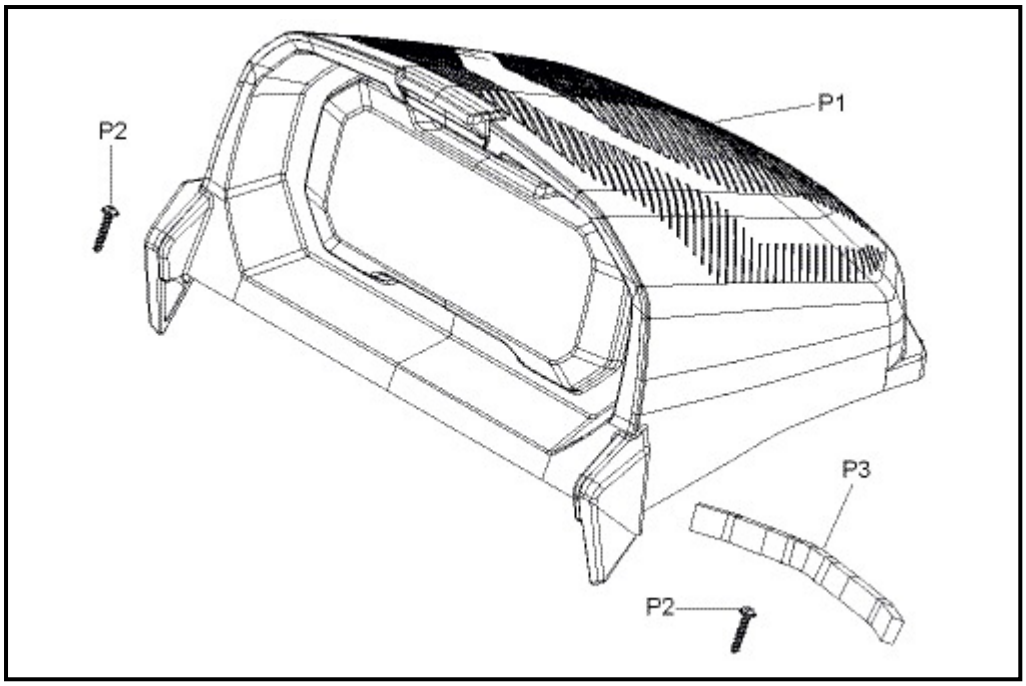

ITEM	DESCRIPTION	PART NUMBER	QTY
P1	Glovebox Extension	Not available separately	1
P2	K40 X 20 Torx Screw	250000650	2
P3	Gasket (140 mm)	511001891	1

INSTRUCTIONS

Vehicle Preparation

1. Pull windshield up and remove from vehicle.

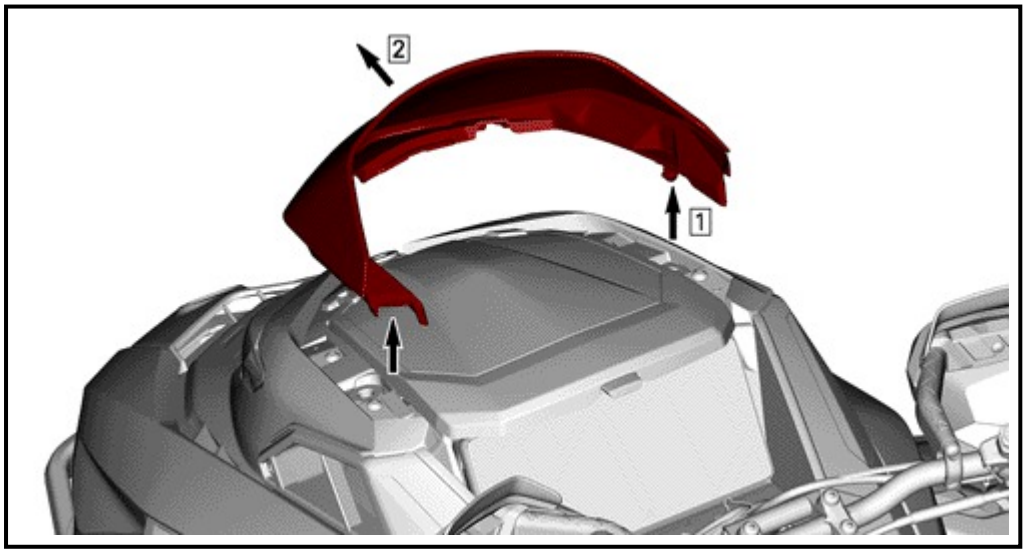

2. Remove the glovebox door

NOTICE **To remove the glovebox door make sure the door is sufficiently open for hinges openings to be aligned with the pull direction.**

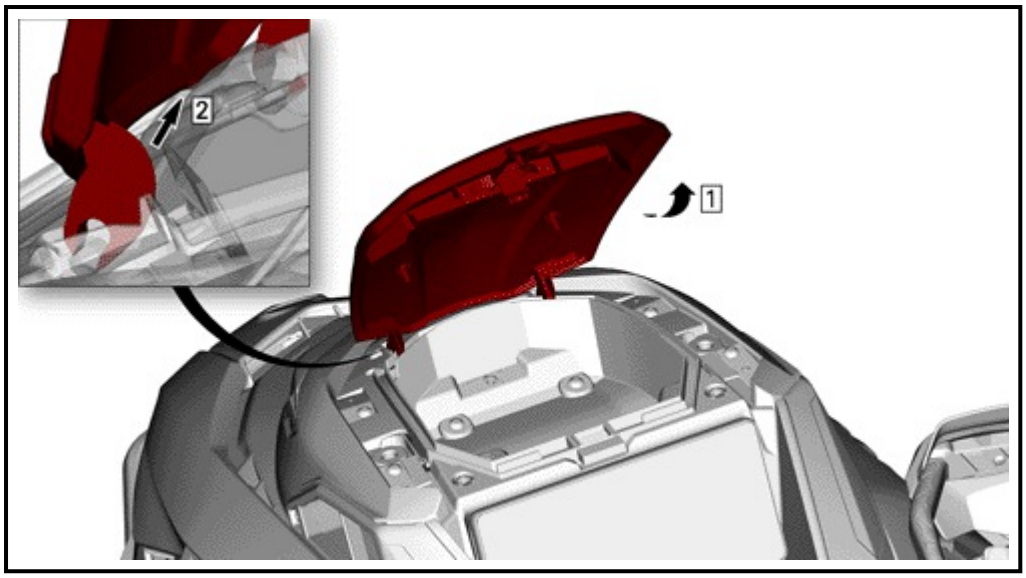

3. Remove and discard the screws and keep the support in place.

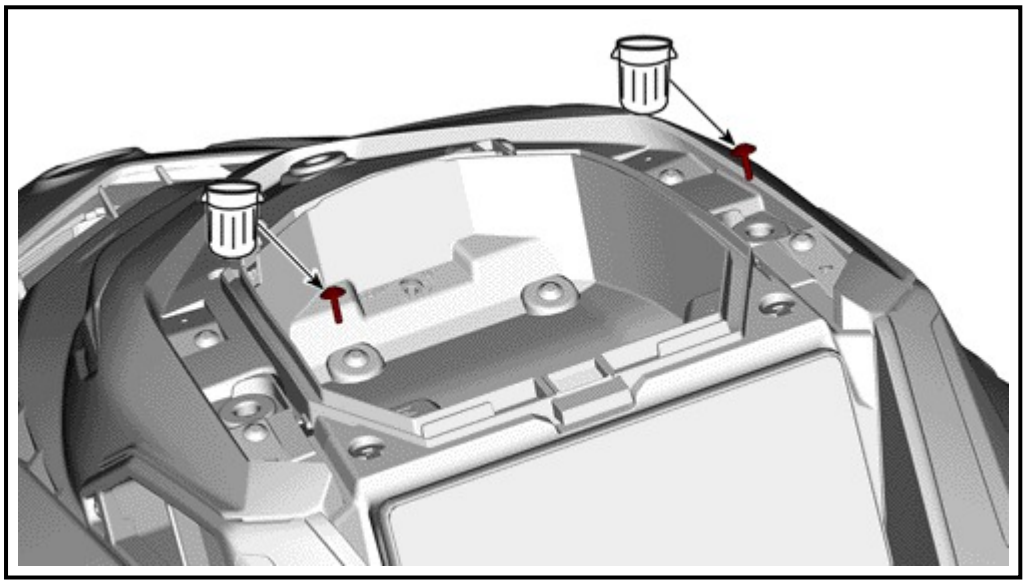

Part Installation

1. Install gasket on the surface of the rib as indicated.

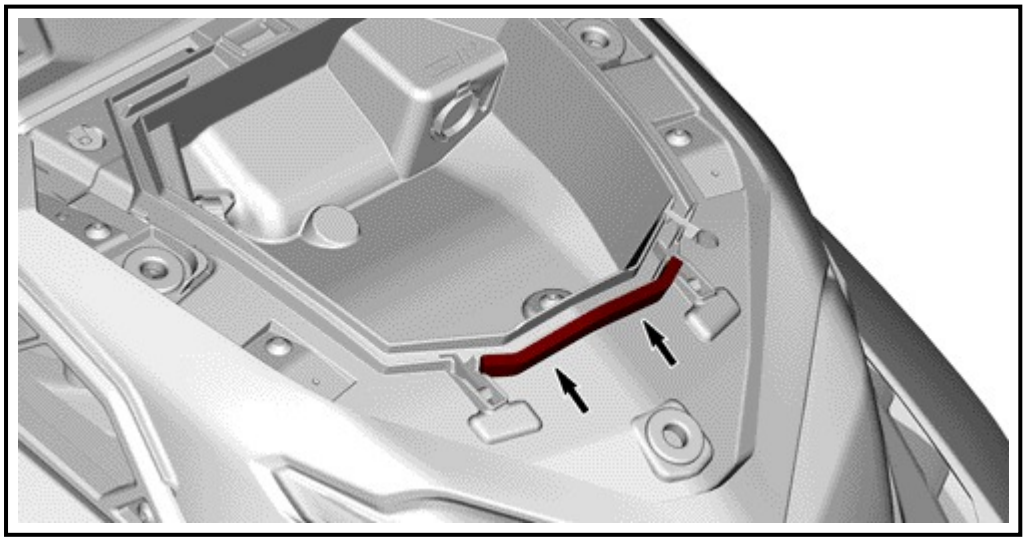

2. Insert the glovebox extension.

NOTICE **To insert the glovebox extension make sure the hinges are properly aligned.**

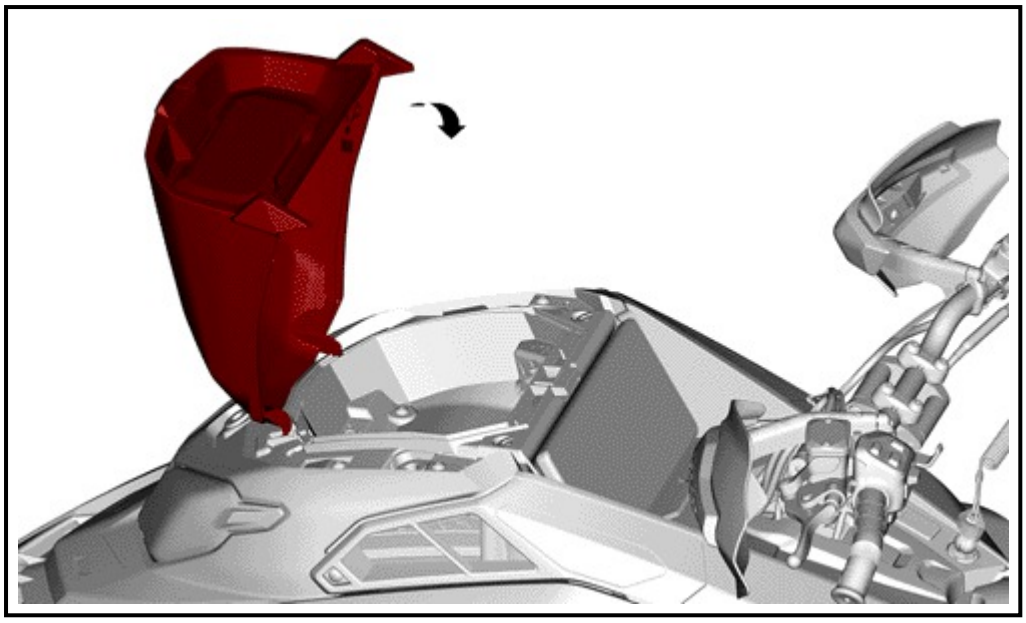

3. Open glovebox extension door and insert screws as indicated.

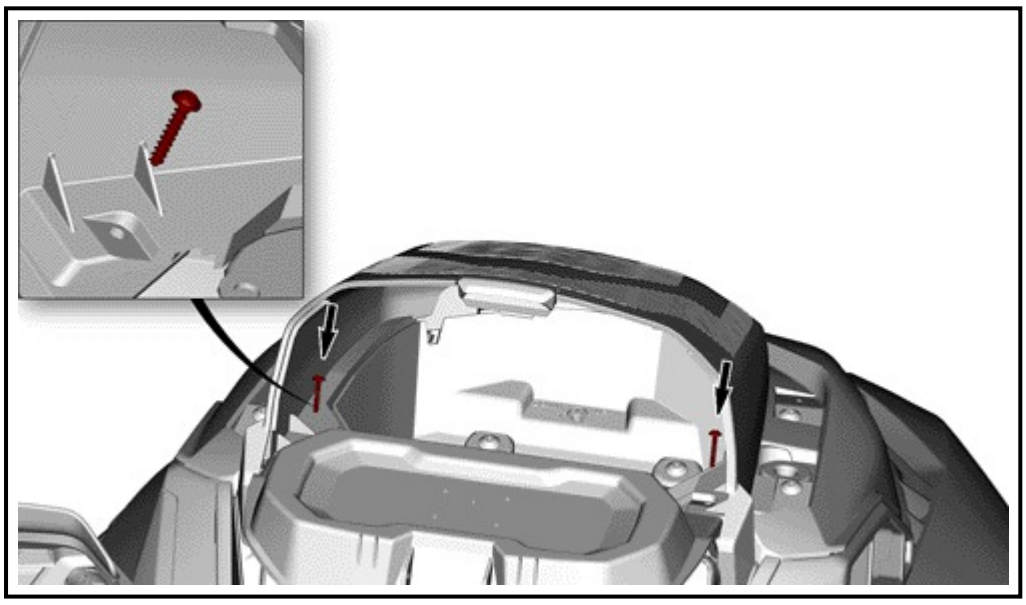

Tightening Torque	
K40 X 20 Torx Screw [P2]	1.5 ± 0.2 N•m (13 ± 2 lbf•**in**)

4. Install windshield on vehicle.

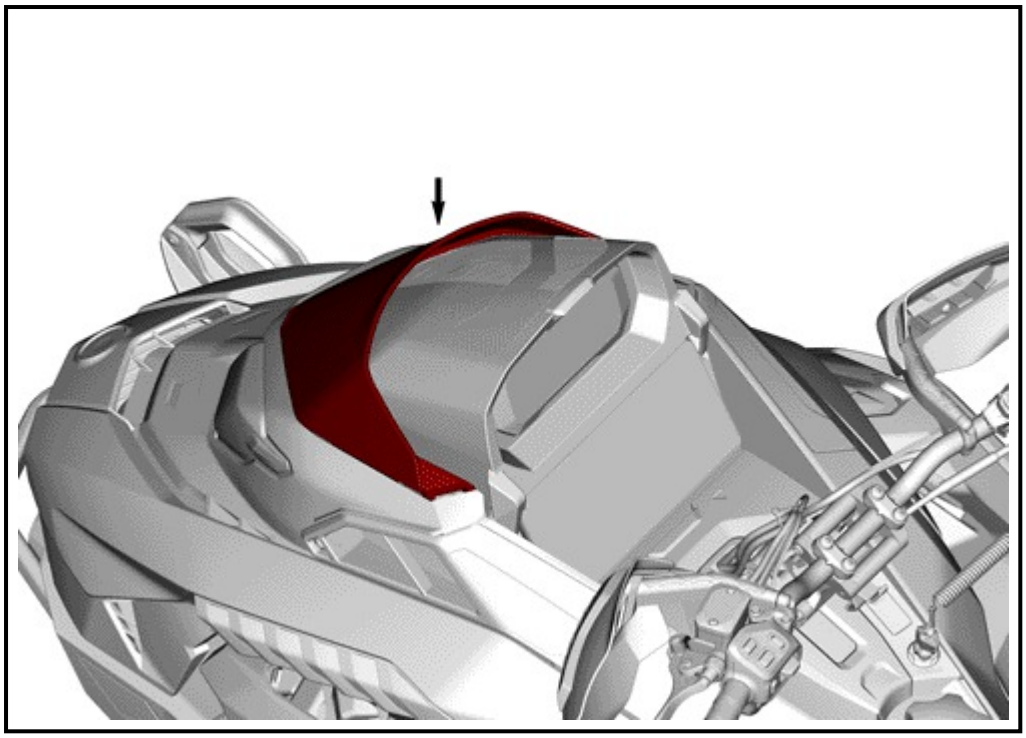

WARNING

Turn handlebar completely from side to side making sure that glovebox extension does not interfere with handlebar controls (throttle lever, brake lever, emergency engine stop switch, handguards etc).

WARNING

Reading an electronic device can distract from the operation of the vehicle, particularly from constantly scanning the environment. Before reading the electronic device, ensure your environment is clear and free from obstacles, and bring the vehicle to a low speed. Additionally, make sure to often double-check for obstacles. Avoid reading any other information or using any application on the electronic device unless the vehicle is brought to a complete stop.