SKI-DOO KIT - Ultra Low Windshield

Product:	**Ski-Doo**
Project no:	**487803954**
Instruction Sheet P/N:	**487803954**
Revision no:	
Revision date:	
Item covered:	**Ultra Low Windshield**

The following symbols may be used in this document:

WARNING

Indicates a hazardous situation which, if not avoided, could result in death or serious injury.

CAUTION: Indicates a hazard situation which, if not avoided, could result in minor or moderate injury.

NOTICE **Indicates an instruction which, if not followed, could severely damage vehicle components or other property.**

WARNING

- This kit is designed for specific applicable models only (authorized BRP dealers will confirm model(s)). It is not recommended for units other than the one (those) for which it was sold.
- Should removal of a locking device (e.g. lock tabs, self-locking fasteners, etc.) be required when undergoing disassembly/assembly, always replace with a new one.
- Torque wrench tightening specifications must strictly be adhered to.
- Unless otherwise specified, engine must be OFF when performing any operation on the vehicle.
- Always be aware of parts that can move, such as wheels, transmission components, etc.

WARNING

Some important safety information and/or operating instructions dedicated to the end user might be included in this instruction sheet. Make sure to give the kit part number as well as the instruction sheet included with this kit to the customer. Verify that the customer has access to all the information required for proper use of the accessory.

NOTE: USE TIGHTENING TORQUES IN THE FOLLOWING TABLE IF NOT OTHERWISE SPECIFIED.

	GRADE			
	5.8	8.8	10.9	12.9
M4	1.8 ± 0.2 N•m (16 ± 2 lbf•**in**)	2.8 ± 0.2 N•m (25 ± 2 lbf•**in**)	3.8 ± 0.2 N•m (34 ± 2 lbf•**in**)	4.5 ± 0.5 N•m (40 ± 4 lbf•**in**)

M5	3.3 ± 0.2 N•m (29 ± 2 lbf•**in**)	5 ± 0.5 N•m (44 ± 4 lbf•**in**)	7.8 ± 0.7 N•m (69 ± 6 lbf•**in**)	9 ± 1 N•m (80 ± 9 lbf•**in**)
M6	7.5 ± 1 N•m (66 ± 9 lbf•**in**)	10 ± 2 N•m (89 ± 18 lbf•**in**)	12.8 ± 2.2 N•m (113 ± 19 lbf•**in**)	16 ± 2 N•m (142 ± 18 lbf•**in**)
M8	15.3 ± 1.7 N•m (135 ± 15 lbf•**in**)	24.5 ± 3.5 N•m (18 ± 3 lbf•ft)	31.5 ± 3.5 N•m (23 ± 3 lbf•ft)	40 ± 5 N•m (30 ± 4 lbf•ft)
M10	29 ± 3 N•m (21 ± 2 lbf•ft)	48 ± 6 N•m (35 ± 4 lbf•ft)	61 ± 9 N•m (45 ± 7 lbf•ft)	73 ± 7 N•m (54 ± 5 lbf•ft)
M12	52 ± 6 N•m (38 ± 4 lbf•ft)	85 ± 10 N•m (63 ± 7 lbf•ft)	105 ± 15 N•m (77 ± 11 lbf•ft)	128 ± 17 N•m (94 ± 13 lbf•ft)
M14	85 ± 10 N•m (63 ± 7 lbf•ft)	135 ± 15 N•m (100 ± 11 lbf•ft)	170 ± 20 N•m (125 ± 15 lbf•ft)	200 ± 25 N•m (148 ± 18 lbf•ft)
M16	126 ± 14 N•m (93 ± 10 lbf•ft)	205 ± 25 N•m (151 ± 18 lbf•ft)	255 ± 30 N•m (188 ± 22 lbf•ft)	305 ± 35 N•m (225 ± 26 lbf•ft)
M18	170 ± 20 N•m (125 ± 15 lbf•ft)	273 ± 32 N•m (201 ± 24 lbf•ft)	330 ± 25 N•m (243 ± 18 lbf•ft)	413 ± 47 N•m (305 ± 35 lbf•ft)

NOTE: The illustrations in this document show typical construction of the different assemblies and may not reproduce the full detail or exact shape of the parts; however, they represent parts that have the same or similar function.

Installation time is approximately **0.3** hours.

PARTS TO BE INSTALLED

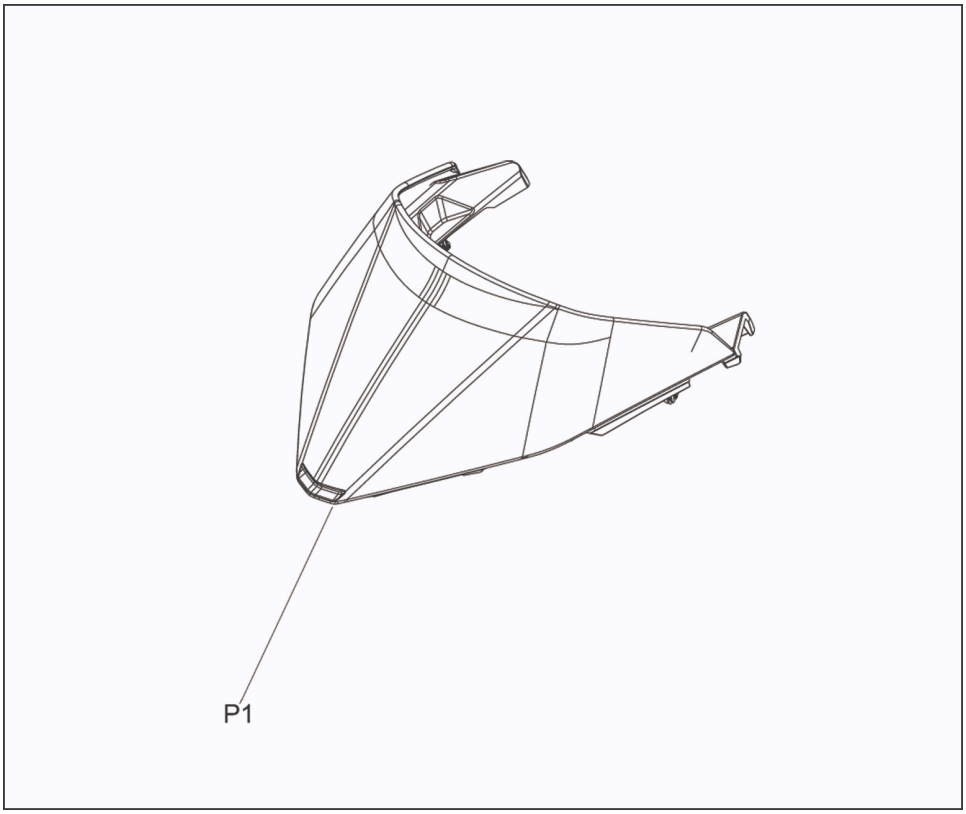

ITEM	DESCRIPTION	PART NUMBER	QTY
P1	Ultra Low Fixed Windshield	517308239	1

INSTALLATION INSTRUCTIONS

1. Remove the original windshield.

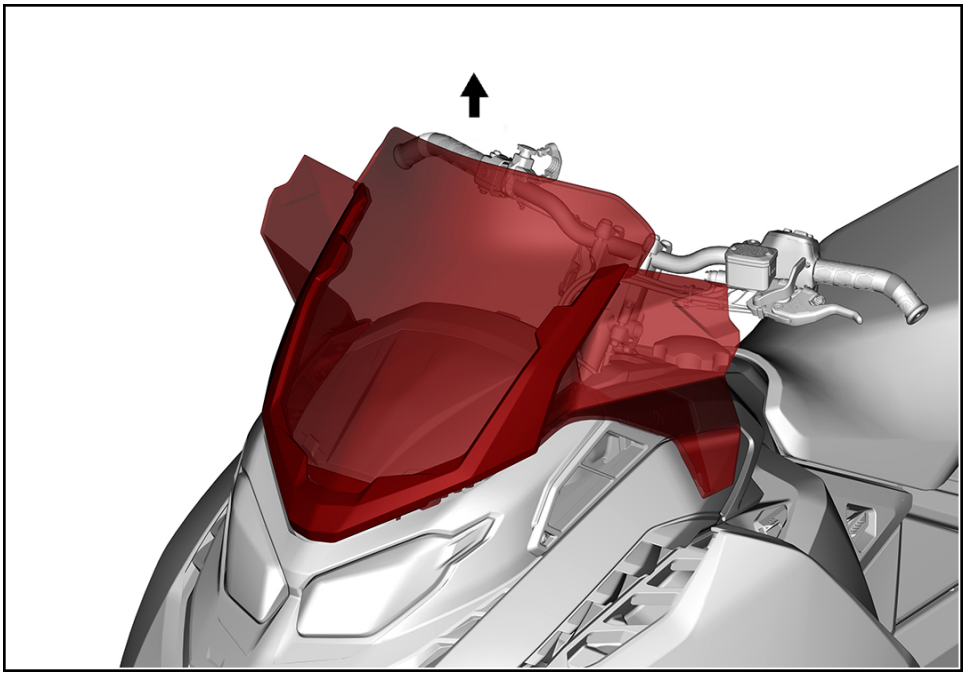

2. Position the mounting elements of the ultra low windshield [P1] in their respective slots. Press into place.

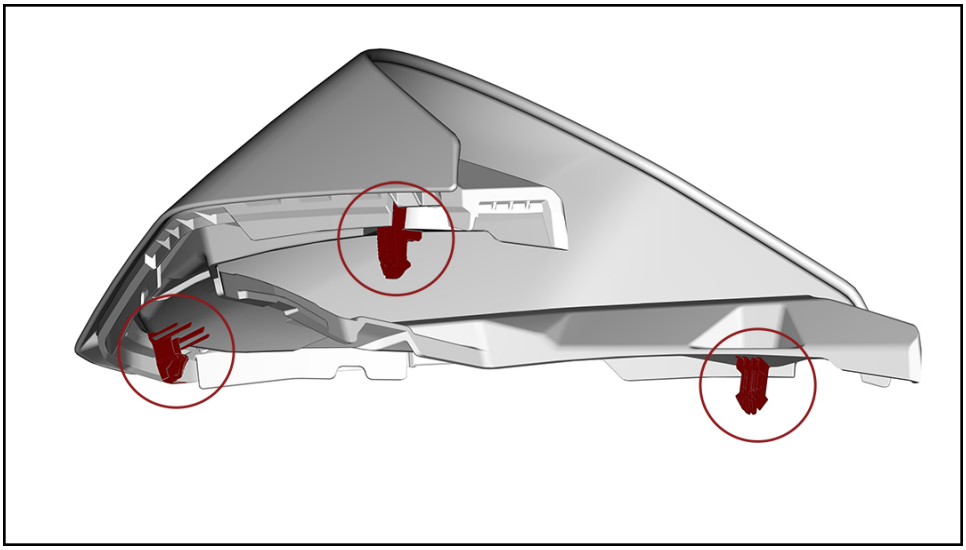

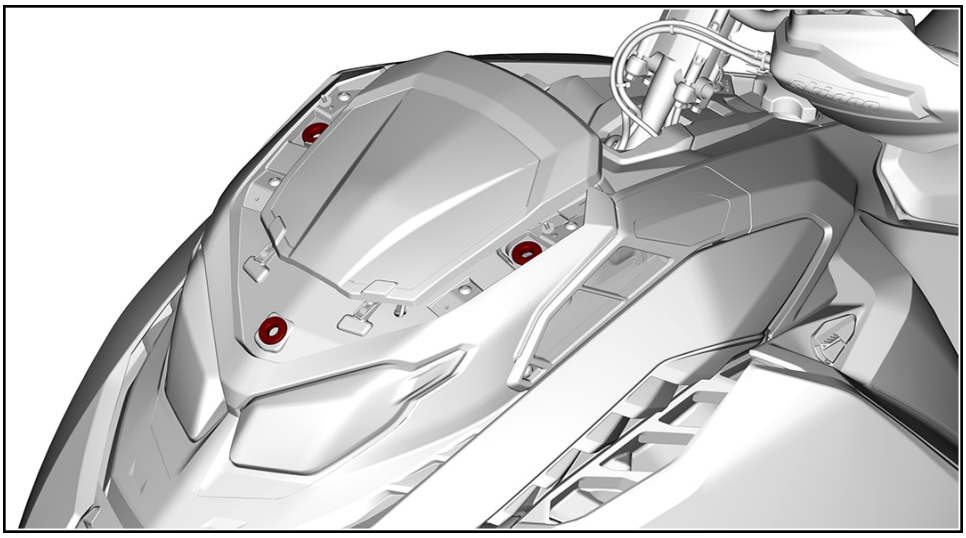

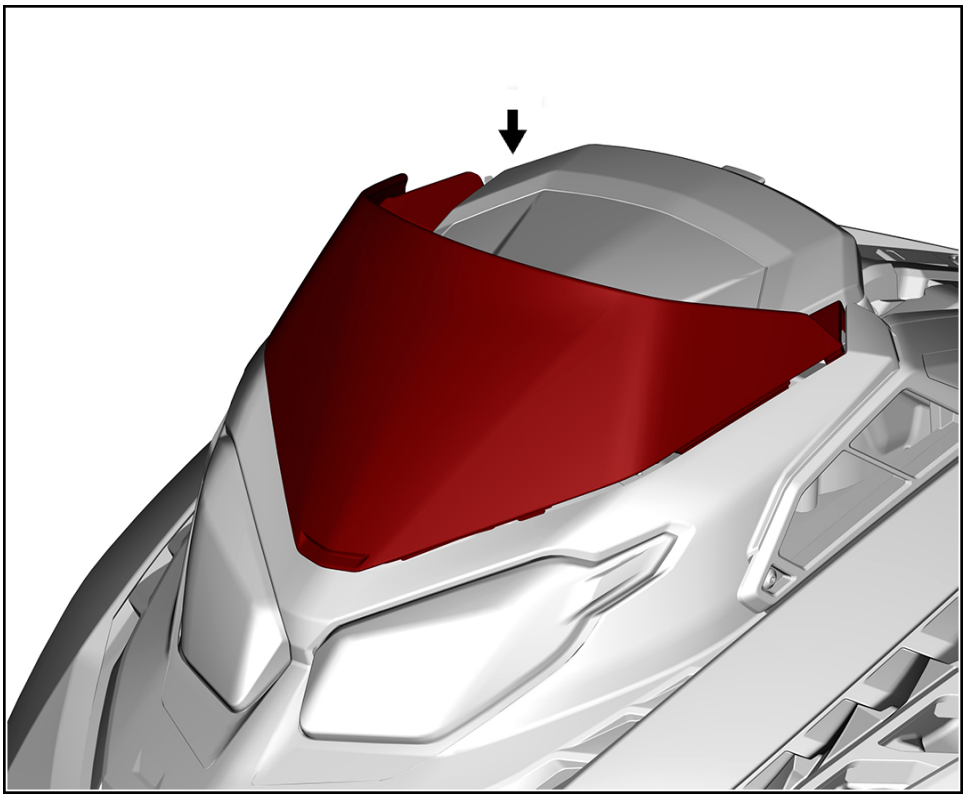

- **WARNING**

Turn the handlebar completely from side to side making sure that the windshield or the air deflectors do not interfere with the handlebar controls (throttle lever, brake lever, emergency engine stop switch, etc.).